AQUASNAP®
30RAP010-150
Air-Cooled Chillers
with *Comfort*Link Controls

Controls, Start-Up, Operation, Service, and Troubleshooting

CONTENTS

When a specific item is located, the item name alternates with the value. Press the ENTER key at a changeable item and the value will be displayed. Press ENTER again and the value will begin to flash indicating that the value can be changed. Use the up and down arrow keys to change the value, and confirm the value by pressing the ENTER key.

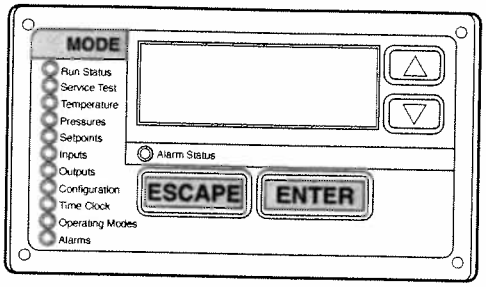

Fig. 1 — Scrolling Marquee Display

Changing item values or testing outputs is accomplished in the same manner. Locate and display the desired item. Press ENTER so that the item value flashes. Use the arrow keys to change the value or state and press the ENTER key to accept it. Press the ESCAPE key to return to the next higher level of structure. Repeat the process as required for other items.

Items in the Configuration and Service Test modes are password protected. The words 'PASS' and 'WORD' will alternate on the display when required. The default password is 1111. Press ENTER and the 1111 password will be displayed. Press ENTER again and the first digit will begin to flash. Use the arrow keys to change the number and press ENTER to accept the digit. Continue with the remaining digits of the password. The password can only be changed through CCN operator interface software such as ComfortWORKS®, ComfortVIEW™ and Service Tool.

Configuration value cannot be changed while the unit is enabled. Remote-Off-Enable must be in the off position in order to change any configuration mode.

See Table 2 and Appendix A for further details. See Table 3 for a description of operating modes.

Table 2 — Scrolling Marquee Display Menu Structure*

MODE	RUN STATUS	SERVICE TEST	TEMPERATURES	PRESSURES	SET POINTS	INPUTS	OUTPUTS	CONFIGURATION	TIME CLOCK	OPERATING MODES	ALARMS
	Auto View of Run Status (VIEW)	Service Test Mode (TEST)	Ent and Leave Unit Temps (UNIT)	Pressures Ckt A (PRC.A)	Cooling Setpoints (COOL)	General Inputs (GEN.I)	General Outputs (GEN.O)	Display Configuration (DISP)	Time of Day (TIME)	Modes (MODE)	Current (CRNT)
	Unit Run Hour and Start (RUN)	Outputs and Pumps (OUTS)	Temperatures Ckt A (CIR.A)	Pressures Ckt B (PRC.B)	Head Pressure Setpoint (HEAD)	Circuit Inputs (CRCT)	Outputs Circuit A EXV (A.EXV)	Unit Configuration (UNIT)	Month, Date, Day, and Year (DATE)		Reset Alarms (RCRN)
	Compressor Run Hours (HOUR)	Ciruit A Comp Test (CMPA)	Temperatures Ckt B (CIR.B)		Brine Freeze Setpoint (FRZ)	4-20mA Inputs (4-20)	Outputs Circuit B EXV (B.EXV)	Unit Options 1 Hardware (OPT1)	Daylight Savings Time (DST)		Alarm History (HIST)
	Compressor Starts (STRT)	Ciruit B Comp Test (CMPB)					Outputs Circuit A (CIR.A)	Unit Options 2 Controls (OPT2)	Local Holiday Schedules (HOL.L)		
	Preventive Maintenance (PM)						Outputs Circuit B (CIR.B)	CCN Network Configuration (CCN)	Schedule Number (SCH.N)		
SUB-MODE	Software Version (VERS)							Cir. A EXV Configuration (EXV.A)	Local Occupancy Schedule (SCH.L)		
								Cir. B EXV Configuration (EXV.B)	Schedule Override (OVR)		
								Motormaster Configuration (MM)			
								Reset Cool Temp (RSET)			
								Set Point and Ramp Load (SLCT)			
								Service Configuration (SERV)			
								Broadcast Configuration (BCST)			

LEGEND

Ckt — Circuit

*Throughout this text, the location of items in the menu structure will be described in the following format:

Item Expansion (Mode Name→Sub-mode Name→ITEM)

For example, using the language selection item:

Language Selection (***Configuration→DISP→LANG***)

NOTE: If the unit has a single circuit, the Circuit B items will not appear in the display, except the ability to configure circuit B will be displayed.

Table 3 — Operating Modes

MODE NO.	ITEM EXPANSION	DESCRIPTION
01	CSM CONTROLLING CHILLER	Chillervisor System Manager (CSM) is controlling the chiller.
02	WSM CONTROLLING CHILLER	Water System Manager (WSM) is controlling the chiller.
03	MASTER/SLAVE CONTROL	Dual Chiller control is enabled.
05	RAMP LOAD LIMITED	Ramp load (pull-down) limiting in effect. In this mode, the rate at which leaving fluid temperature is dropped is limited to a predetermined value to prevent compressor overloading. See Cooling Ramp Loading (***Configuration→SLCT→CRMP***). The pull-down limit can be modified, if desired, to any rate from 0.2° F to 2° F (0.1° to 1° C)/minute.
06	TIMED OVERRIDE IN EFFECT	Timed override is in effect. This is a 1 to 4 hour temporary override of the programmed schedule, forcing unit to Occupied mode. Override can be implemented with unit under Local (Enable) or CCN (Carrier Comfort Network®) control. Override expires after each use.
07	LOW COOLER SUCTION TEMPA	Circuit A cooler Freeze Protection mode. At least one compressor must be on, and the Saturated Suction Temperature is not increasing greater than 1.1° F (0.6° C) in 10 seconds. If the saturated suction temperature is less than the Brine Freeze Point (***Set Points→FRZ →BR.FZ***) minus 6° F (3.4° C) and less than the leaving fluid temperature minus 14° F (7.8° C) for 2 minutes, a stage of capacity will be removed from the circuit. Or, If the saturated suction temperature is less than the Brine Freeze Point minus 14° F (7.8° C), for 90 seconds, a stage of capacity will be removed from the circuit. The control will continue to decrease capacity as long as either condition exists.
08	LOW COOLER SUCTION TEMPB	Circuit B cooler Freeze Protection mode. At least one compressor must be on, and the Saturated Suction Temperature is not increasing greater than 1.1° F (0.6° C) in 10 seconds. If the saturated suction temperature is less than the Brine Freeze Point (***Set Points→FRZ →BR.FZ***) minus 6° F (3.4° C) and less than the leaving fluid temperature minus 14° F (7.8° C) for 2 minutes, a stage of capacity will be removed from the circuit. Or, If the saturated suction temperature is less than the Brine Freeze Point minus 14° F (7.8° C), for 90 seconds, a stage of capacity will be removed from the circuit. The control will continue to decrease capacity as long as either condition exists.
09	SLOW CHANGE OVERRIDE	Slow change override is in effect. The leaving fluid temperature is close to and moving towards the control point.
10	MINIMUM OFF TIME ACTIVE	Chiller is being held off by Minutes Off Time (***Configuration→OPT2→DELY***).
13	DUAL SETPOINT	Dual Set Point mode is in effect. Chiller controls to Cooling Set Point 1 (***Set Points→COOL →CSP.1***) during occupied periods and Cooling Set Point 2 (***Set Points →COOL→CSP.2***) during unoccupied periods.
14	TEMPERATURE RESET	Temperature reset is in effect. In this mode, chiller is using temperature reset to adjust leaving fluid set point upward and is currently controlling to the modified set point. The set point can be modified based on return fluid, outdoor-air-temperature, space temperature, or 4 to 20 mA signal.
15	DEMAND/SOUND LIMITED	Demand limit is in effect. This indicates that the capacity of the chiller is being limited by demand limit control option. Because of this limitation, the chiller may not be able to produce the desired leaving fluid temperature. Demand limit can be controlled by switch inputs or a 4 to 20 mA signal.
16	COOLER FREEZE PROTECTION	Cooler fluid temperatures are approaching the Freeze point (see Alarms and Alerts section for definition). The chiller will be shut down when either fluid temperature falls below the Freeze point.
17	LOW TEMPERATURE COOLING	Chiller is in Cooling mode and the rate of change of the leaving fluid is negative and decreasing faster than -0.5° F per minute. Error between leaving fluid and control point exceeds fixed amount. Control will automatically unload the chiller if necessary.
18	HIGH TEMPERATURE COOLING	Chiller is in Cooling mode and the rate of change of the leaving fluid is positive and increasing. Error between leaving fluid and control point exceeds fixed amount. Control will automatically load the chiller if necessary to better match the increasing load.
19	MAKING ICE	Chiller is in an unoccupied mode and is using Cooling Set Point 3 (***Set Points →COOL →CSP.3***) to make ice. The ice done input to the Energy Management Module (EMM) is open.
20	STORING ICE	Chiller is in an unoccupied mode and is controlling to Cooling Set Point 2 (***Set Points →COOL →CSP.2***). The ice done input to the Energy Management Module (EMM) is closed.
21	HIGH SCT CIRCUIT A	Chiller is in a Cooling mode and the Saturated Condensing Temperature (SCT) is greater than the calculated maximum limit. No additional stages of capacity will be added. Chiller capacity may be reduced if SCT continues to rise to avoid high-pressure switch trips by reducing condensing temperature.
22	HIGH SCT CIRCUIT B	Chiller is in a Cooling mode and the Saturated Condensing Temperature (SCT) is greater than the calculated maximum limit. No additional stages of capacity will be added. Chiller capacity may be reduced if SCT continues to rise to avoid high-pressure switch trips by reducing condensing temperature.
23	MINIMUM COMP ON TIME	Cooling load may be satisfied, however control continues to operate compressor to ensure proper oil return. May be an indication of oversized application, low fluid flow rate or low loop volume.
24	PUMP OFF DELAY TIME	Cooling load is satisfied, however cooler pump continues to run for the number of minutes set by the configuration variable Cooler Pump Shutdown Delay (***Configuration→OPT1 →PM.DY***).
25	LOW SOUND MODE	Chiller operates at higher condensing temperature and/or reduced capacity to minimize overall unit noise during evening/night hours (***Configuration→OPT2→LS.MD***).

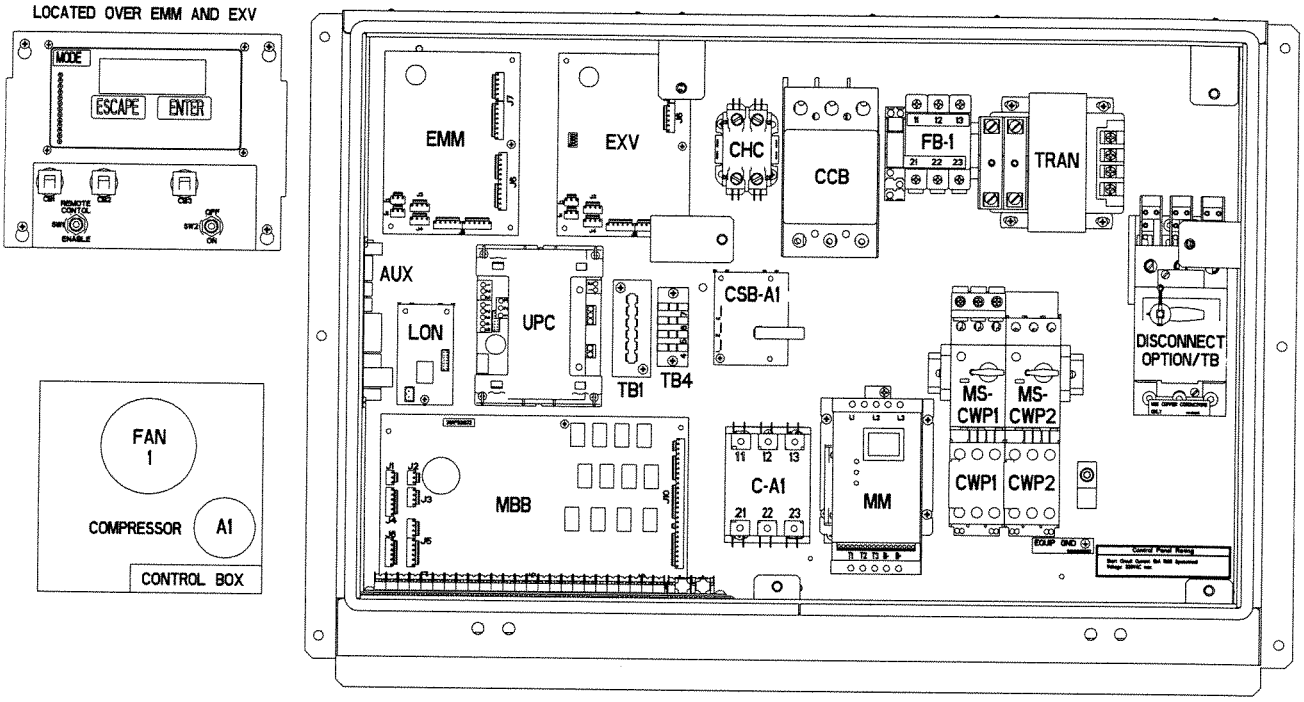

Fig. 3 — Typical Control Box for 30RAP010,015

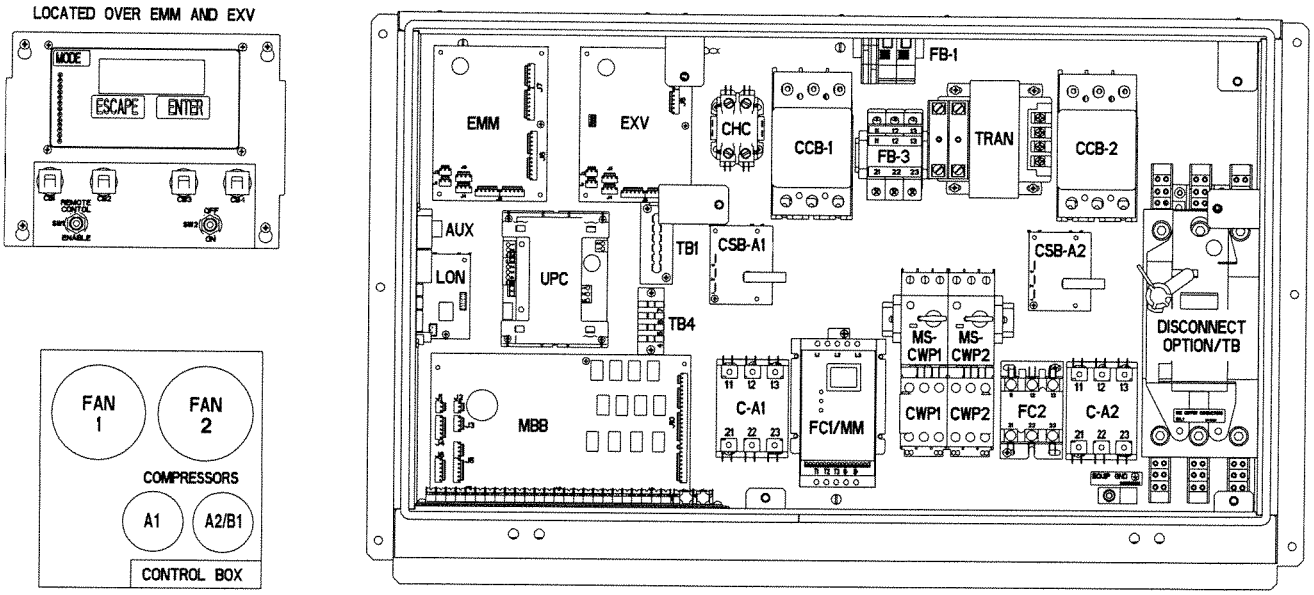

Fig. 4 — Typical Control Box for 30RAP018-030

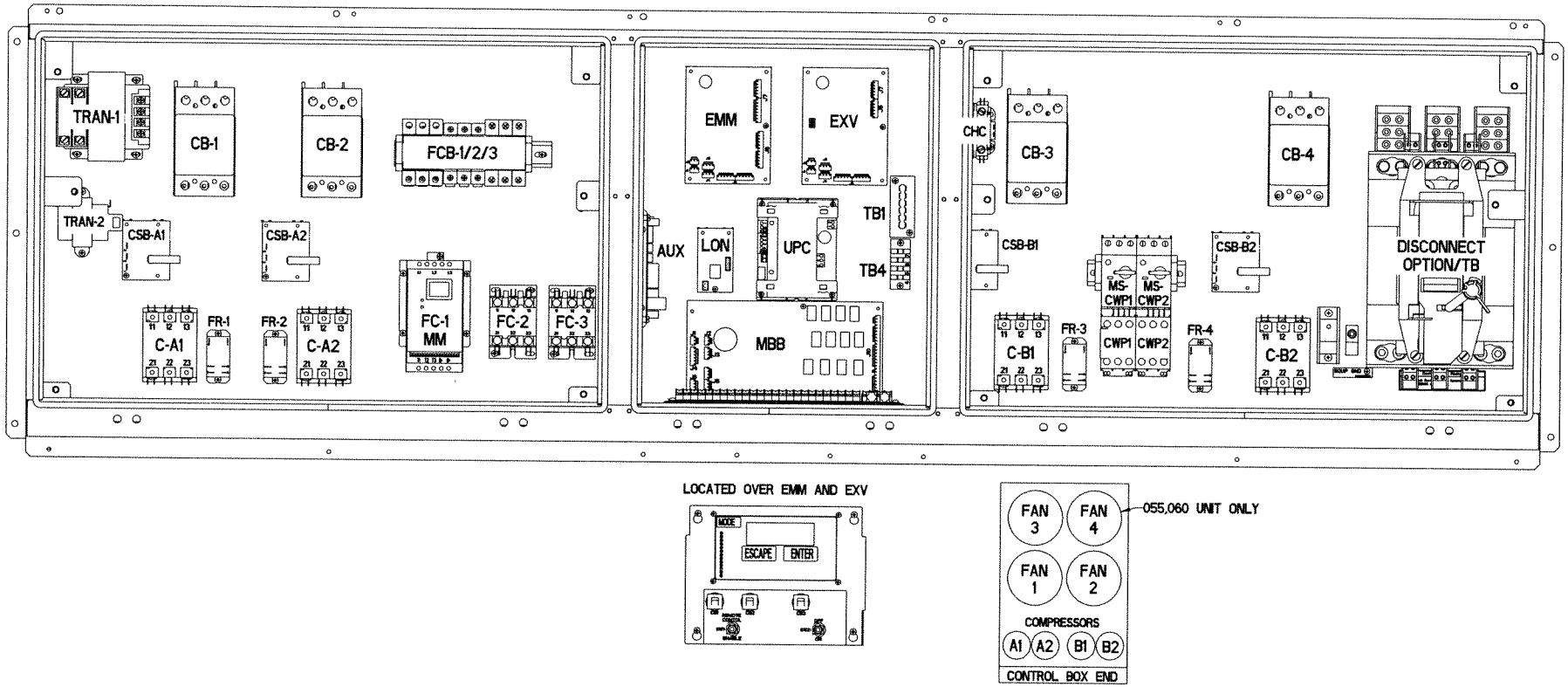

Fig. 5 — Typical Control Box for 30RAP035-060

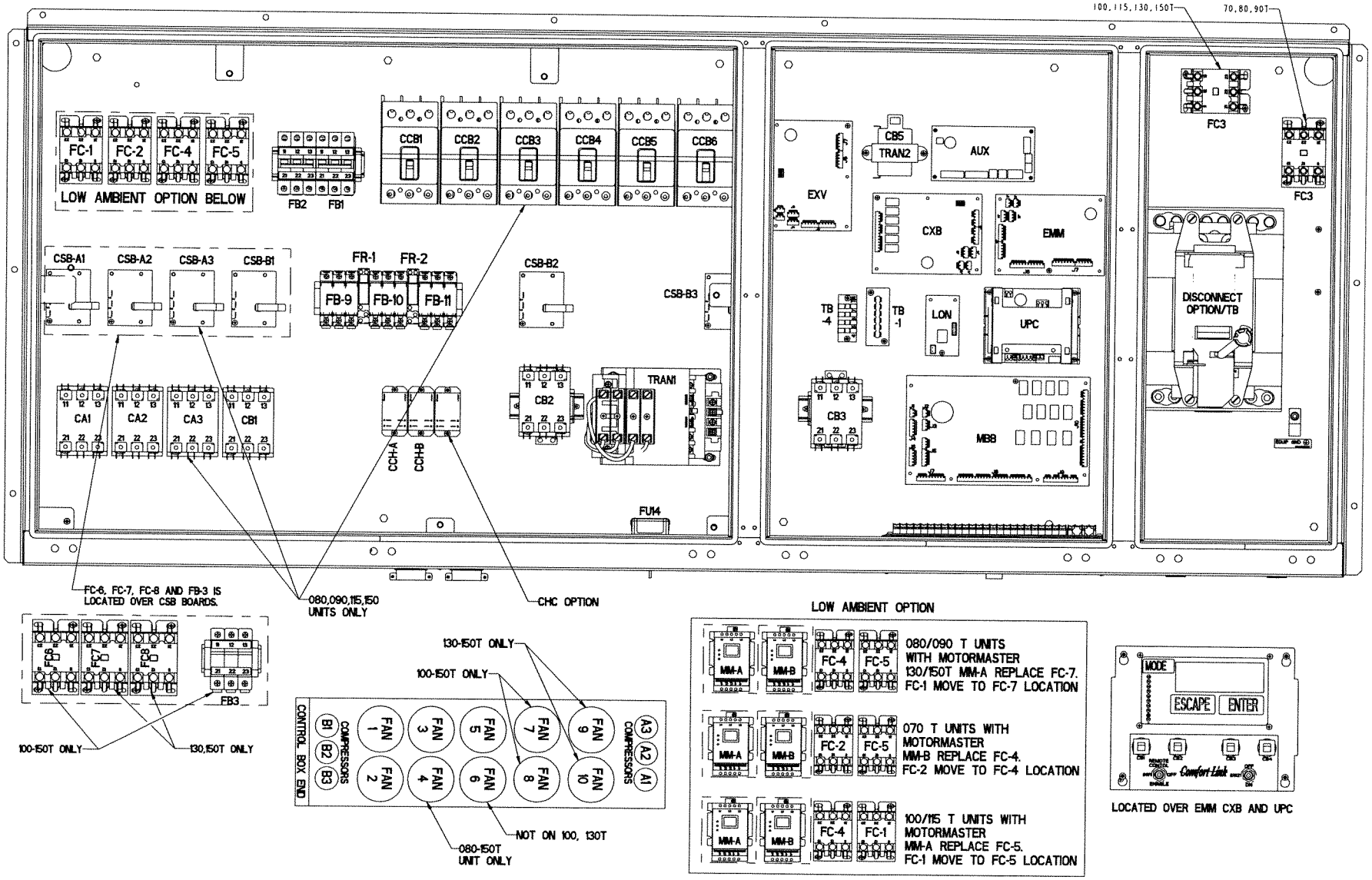

Fig. 6 — Typical Control Box for 30RAP070-150

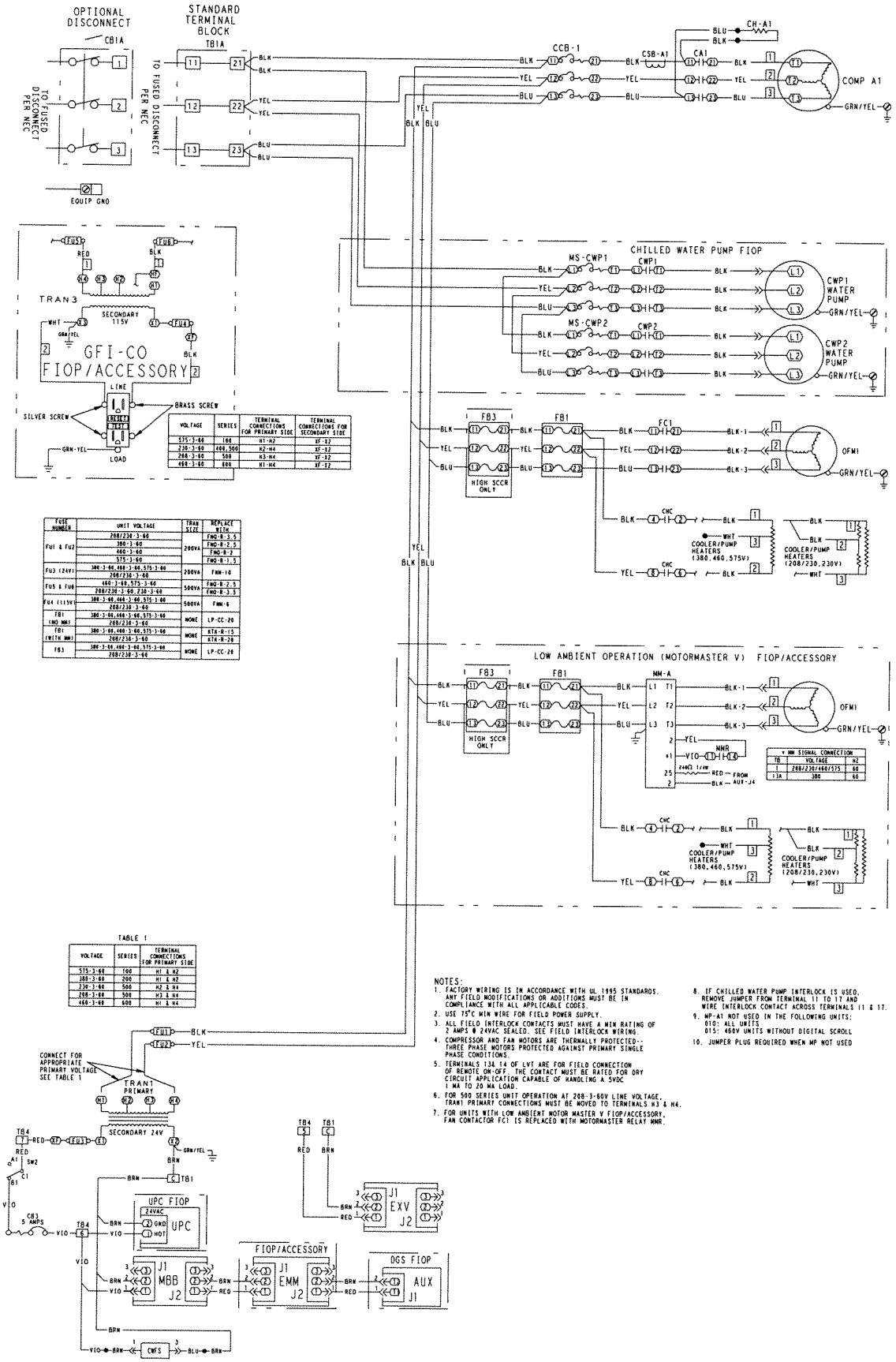

VOLTAGE	SERIES	TERMINAL CONNECTIONS FOR PRIMARY SIDE	TERMINAL CONNECTIONS FOR SECONDARY SIDE
575-3-60	100	H1-H2	X1-X2
230-3-60	400,500	H2-H4	X1-X2
208-3-60	500	H3-H4	X1-X2
460-3-60	600	H1-H4	X1-X2

FUSE NUMBER	UNIT VOLTAGE	TRAN SIZE	REPLACE WITH
FU1 & FU2	208/230-3-60	200VA	FNQ-R-3.5
	380-3-60		FNQ-R-2.5
	460-3-60		FNQ-R-2
	575-3-60		FNQ-R-1.5
FU3 (24V)	380-3-60,460-3-60,575-3-60	200VA	FNM-10
	208/230-3-60		
FU5 & FU6	460-3-60,575-3-60	500VA	FNQ-R-2.5
	208/230-3-60,230-3-60		FNQ-R-3.5
FU4 (115V)	380-3-60,460-3-60,575-3-60	500VA	FNM-6
	208/230-3-60		
TB1 (NO MM)	380-3-60,460-3-60,575-3-60	NONE	LP-CC-20
	208/230-3-60		
TB1 (WITH MM)	380-3-60,460-3-60,575-3-60	NONE	KTK-R-15
	208/230-3-60		KTK-R-20
FB3	380-3-60,460-3-60,575-3-60	NONE	LP-CC-20
	208/230-3-60		

MM SIGNAL CONNECTION		
TB	VOLTAGE	N2
1	208/230/460/575	60
13A	380	60

TABLE 1

VOLTAGE	SERIES	TERMINAL CONNECTIONS FOR PRIMARY SIDE
575-3-60	100	H1 & H2
380-3-60	200	H1 & H3
230-3-60	500	H2 & H4
208-3-60	500	H3 & H4
460-3-60	600	H1 & H4

NOTES:
1. FACTORY WIRING IS IN ACCORDANCE WITH UL 1995 STANDARDS. ANY FIELD MODIFICATIONS OR ADDITIONS MUST BE IN COMPLIANCE WITH ALL APPLICABLE CODES.
2. USE 75°C MIN WIRE FOR FIELD POWER SUPPLY.
3. ALL FIELD INTERLOCK CONTACTS MUST HAVE A MIN RATING OF 2 AMPS @ 24VAC SEALED. SEE FIELD INTERLOCK WIRING.
4. COMPRESSOR AND FAN MOTORS ARE THERMALLY PROTECTED--THREE PHASE MOTORS PROTECTED AGAINST PRIMARY SINGLE PHASE CONDITIONS.
5. TERMINALS 13A 14 OF LVT ARE FOR FIELD CONNECTION OF REMOTE ON-OFF. THE CONTACT MUST BE RATED FOR DRY CIRCUIT APPLICATION CAPABLE OF HANDLING A 5VDC 1 MA TO 20 MA LOAD.
6. FOR 500 SERIES UNIT OPERATION AT 208-3-60V LINE VOLTAGE, TRAN1 PRIMARY CONNECTIONS MUST BE MOVED TO TERMINALS H3 & H4.
7. FOR UNITS WITH LOW AMBIENT MOTOR MASTER V FIOP/ACCESSORY, FAN CONTACTOR FC1 IS REPLACED WITH MOTORMASTER RELAY MMR.
8. IF CHILLED WATER PUMP INTERLOCK IS USED, REMOVE JUMPER FROM TERMINAL 11 TO 17 AND WIRE INTERLOCK CONTACT ACROSS TERMINALS 11 & 17.
9. MP-A1 NOT USED IN THE FOLLOWING UNITS:
   010: ALL UNITS
   015: 460V UNITS WITHOUT DIGITAL SCROLL
10. JUMPER PLUG REQUIRED WHEN MP NOT USED

Fig. 7A — Typical Wiring Schematic, 30RAP010,015 Units — Power Wiring

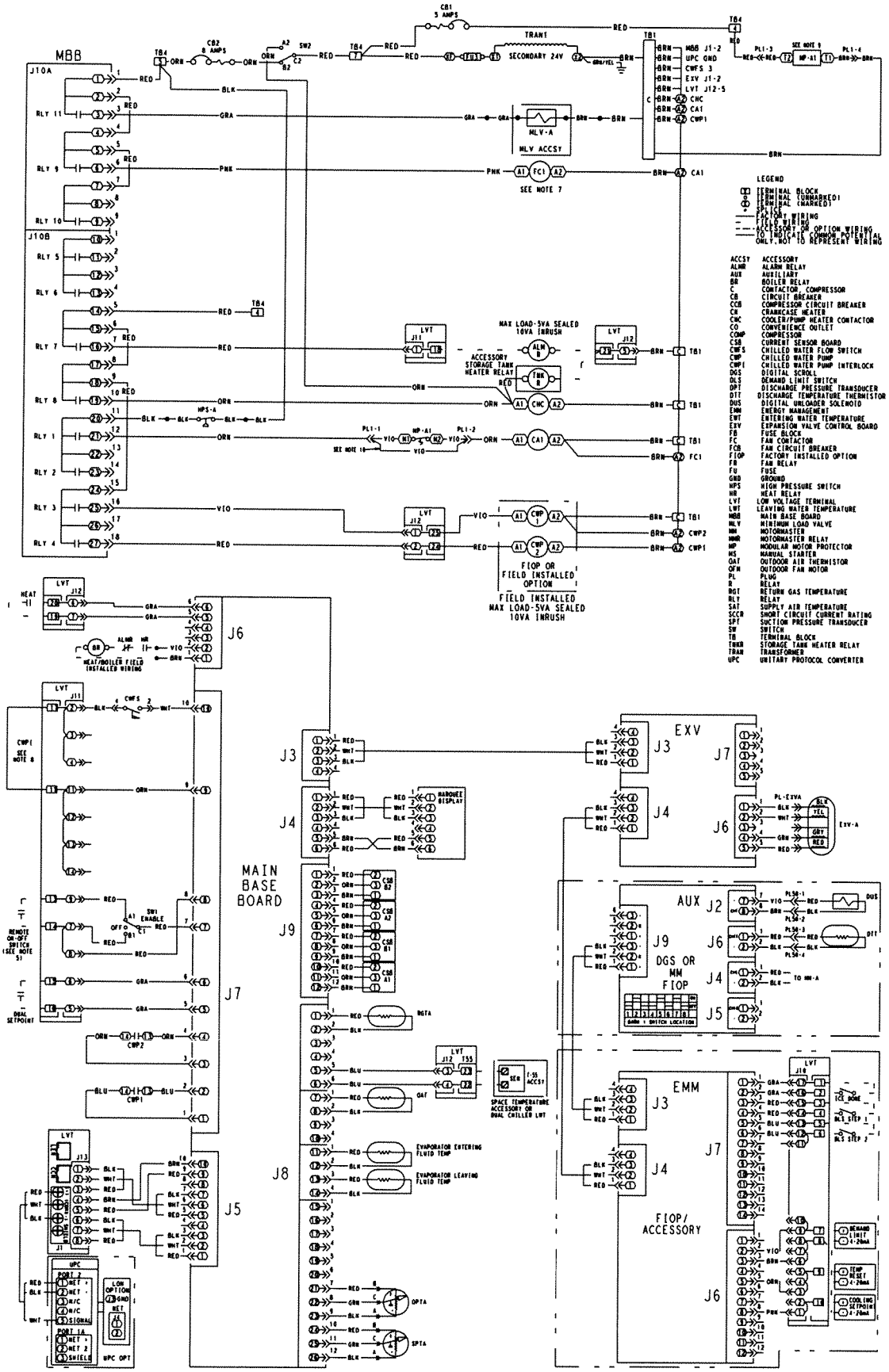

Fig. 7B — Typical Wiring Schematic, 30RAP010,015 Units — Control Wiring

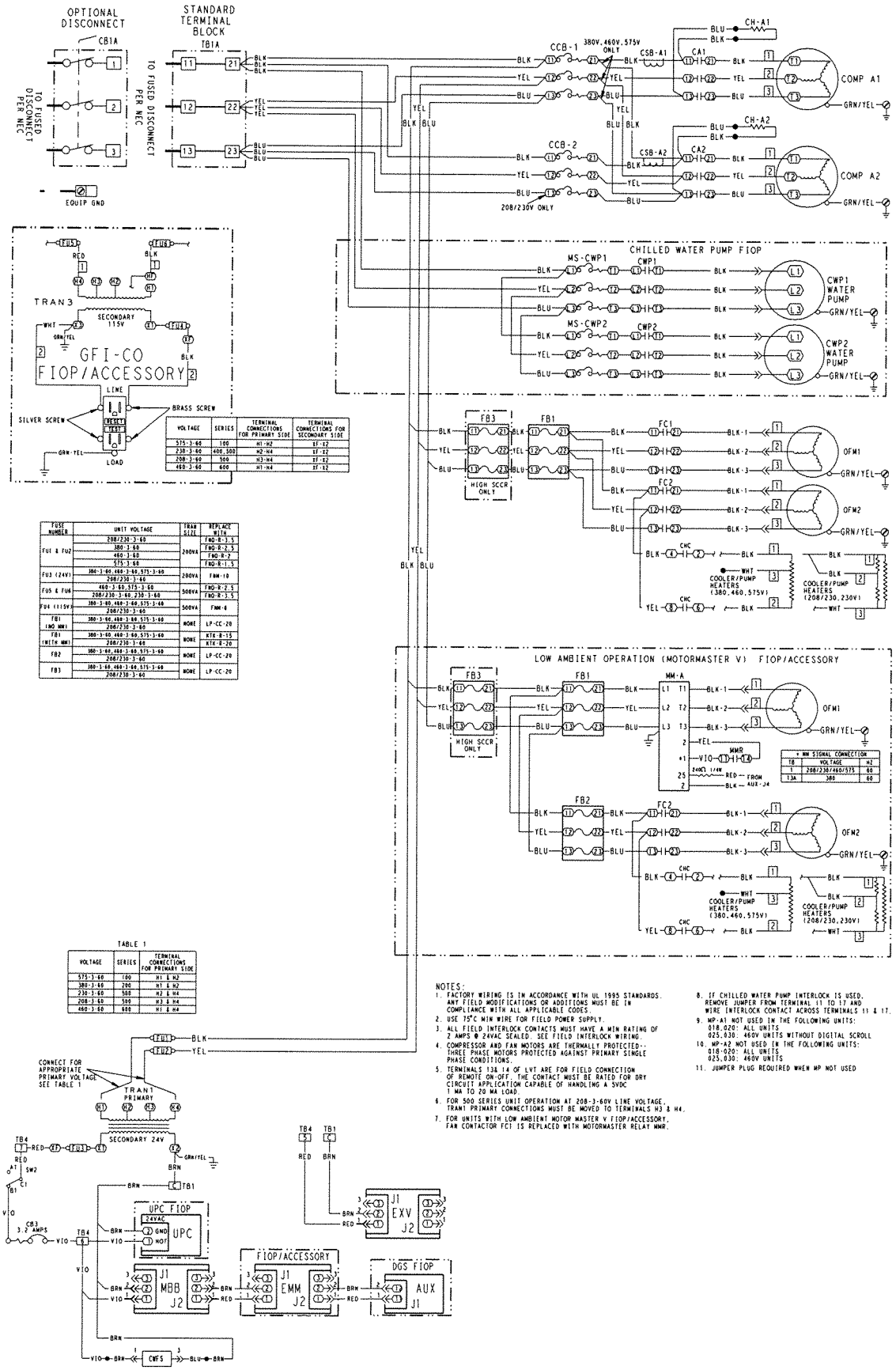

FUSE NUMBER	UNIT VOLTAGE	TRAN SIZE	REPLACE WITH
FU1 & FU2	208/230-3-60	200VA	FNQ-R-3.5
	380-3-60		FNQ-R-2.5
	460-3-60		FNQ-R-2
	575-3-60		FNQ-R-1.5
FU3 (24V)	380-3-60,460-3-60,575-3-60	200VA	FRN-10
	208/230-3-60		
FU5 & FU6	460-3-60,575-3-60	500VA	FNQ-R-2.5
	208/230-3-60,230-3-60		FNQ-R-3.5
FU4 (115V)	380-3-60,460-3-60,575-3-60	500VA	FNM-6
	208/230-3-60		
FB1 (NO MM)	380-3-60,460-3-60,575-3-60	NONE	LP-CC-20
	208/230-3-60		
FB1 (WITH MM)	380-3-60,460-3-60,575-3-60	NONE	KTK-R-15
	208/230-3-60		KTK-R-20
FB2	380-3-60,460-3-60,575-3-60	NONE	LP-CC-20
	208/230-3-60		
FB3	380-3-60,460-3-60,575-3-60	NONE	LP-CC-20
	208/230-3-60		

VOLTAGE	SERIES	TERMINAL CONNECTIONS FOR PRIMARY SIDE	TERMINAL CONNECTIONS FOR SECONDARY SIDE
575-3-60	100	H1-H2	X1-X2
230-3-60	400,500	H2-H4	X1-X2
208-3-60	500	H3-H4	X1-X2
460-3-60	600	H1-H4	X1-X2

TABLE 1

VOLTAGE	SERIES	TERMINAL CONNECTIONS FOR PRIMARY SIDE
575-3-60	100	H1 & H2
380-3-60	200	H1 & H2
230-3-60	500	H2 & H4
208-3-60	500	H3 & H4
460-3-60	600	H1 & H4

MM SIGNAL CONNECTION		
TB	VOLTAGE	H1
1	208/230/460/575	60
13A	380	60

NOTES:
1. FACTORY WIRING IS IN ACCORDANCE WITH UL 1995 STANDARDS. ANY FIELD MODIFICATIONS OR ADDITIONS MUST BE IN COMPLIANCE WITH ALL APPLICABLE CODES.
2. USE 75°C MIN WIRE FOR FIELD POWER SUPPLY.
3. ALL FIELD INTERLOCK CONTACTS MUST HAVE A MIN RATING OF 2 AMPS @ 24VAC SEALED. SEE FIELD INTERLOCK WIRING.
4. COMPRESSOR AND FAN MOTORS ARE THERMALLY PROTECTED-- THREE PHASE MOTORS PROTECTED AGAINST PRIMARY SINGLE PHASE CONDITIONS.
5. TERMINALS 13A, 14 OF LVT ARE FOR FIELD CONNECTION OF REMOTE ON-OFF. THE CONTACT MUST BE RATED FOR DRY CIRCUIT APPLICATION CAPABLE OF HANDLING A 5VDC 1 MA TO 20 MA LOAD.
6. FOR 500 SERIES UNIT OPERATION AT 208-3-60V LINE VOLTAGE, TRAN1 PRIMARY CONNECTIONS MUST BE MOVED TO TERMINALS H3 & H4.
7. FOR UNITS WITH LOW AMBIENT MOTOR MASTER V FIOP/ACCESSORY, FAN CONTACTOR FC1 IS REPLACED WITH MOTORMASTER RELAY MMR.
8. IF CHILLED WATER PUMP INTERLOCK IS USED, REMOVE JUMPER FROM TERMINAL 11 TO 17 AND WIRE INTERLOCK CONTACT ACROSS TERMINALS 11 & 17.
9. MP-A1 NOT USED IN THE FOLLOWING UNITS: 018,020: ALL UNITS 025,030: 460V UNITS WITHOUT DIGITAL SCROLL
10. MP-A2 NOT USED IN THE FOLLOWING UNITS: 018-020: ALL UNITS 025,030: 460V UNITS
11. JUMPER PLUG REQUIRED WHEN MP NOT USED

Fig. 8A — Typical Wiring Schematic, 30RAP018-030 Units — Power Wiring

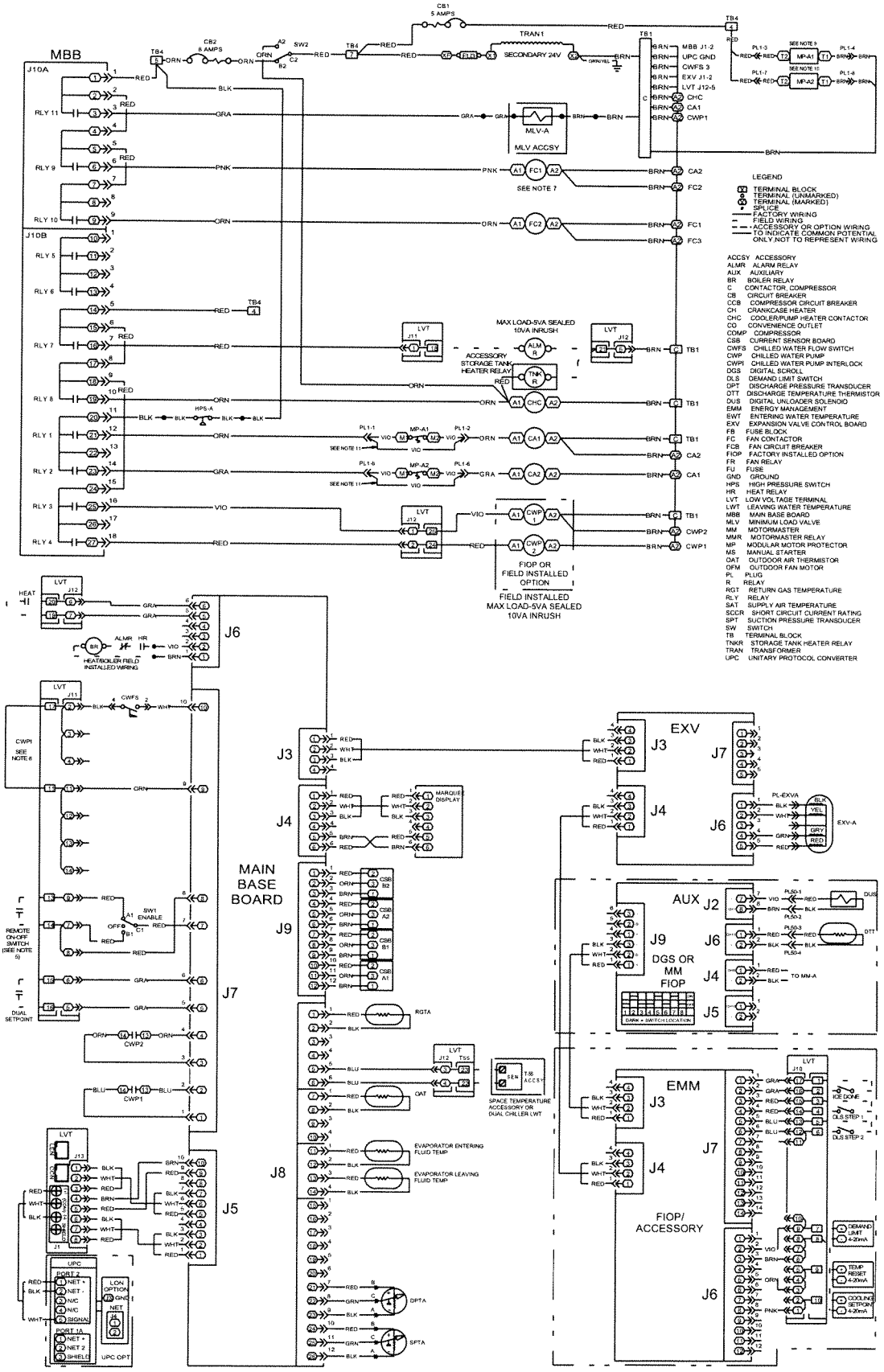

Fig. 8B — Typical Wiring Schematic, 30RAP018-030 Units — Control Wiring

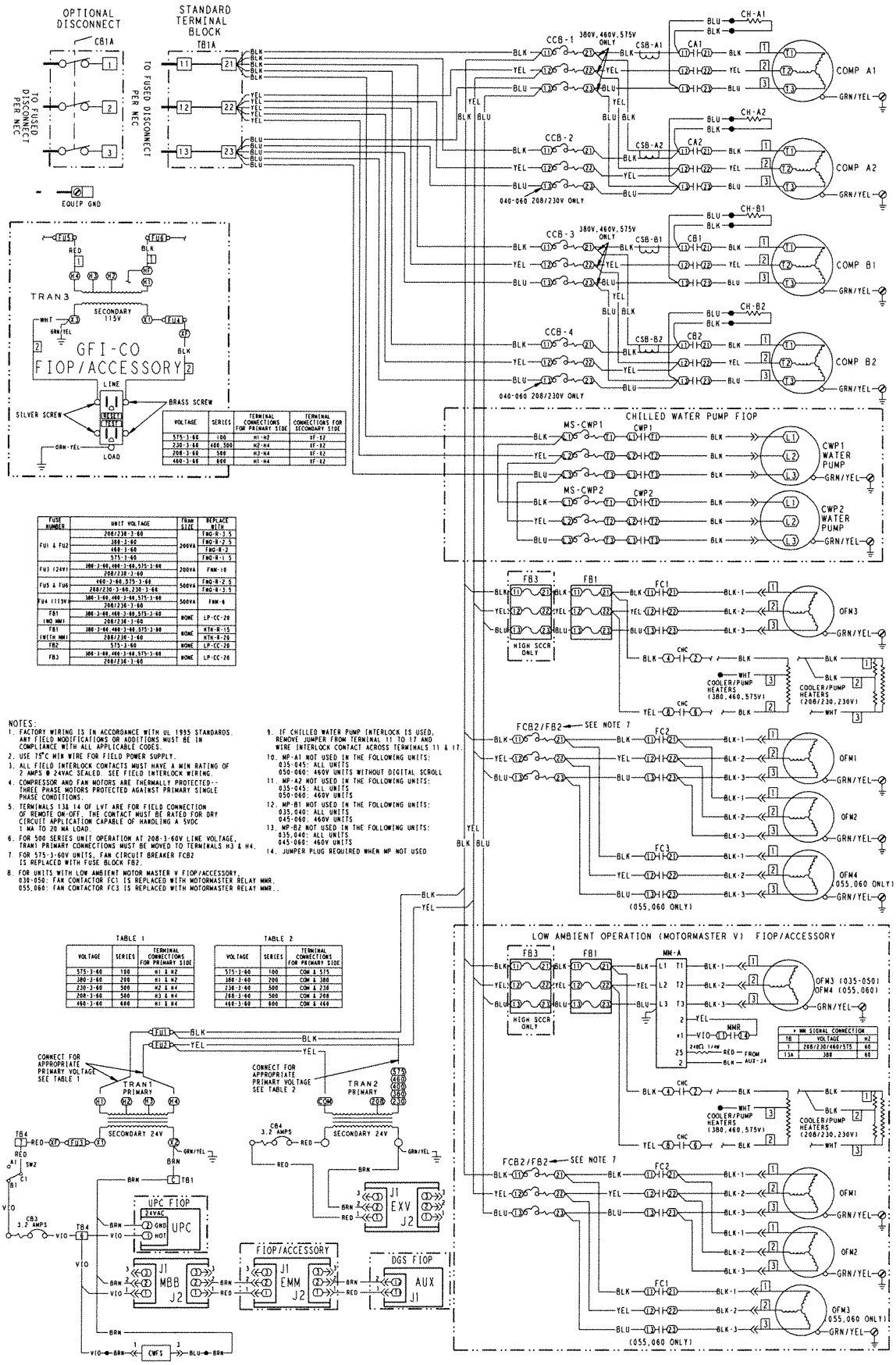

VOLTAGE	SERIES	TERMINAL CONNECTIONS FOR PRIMARY SIDE	TERMINAL CONNECTIONS FOR SECONDARY SIDE
575-3-60	100	H1-H2	X1-X2
230-3-60	400,500	H2-H4	X1-X2
208-3-60	500	H3-H4	X1-X2
460-3-60	600	H1-H4	X1-X2

FUSE NUMBER	UNIT VOLTAGE	TRAN SIZE	REPLACE WITH
FU1 & FU2	208/230-3-60	200VA	FNQ-R-3.5
	380-3-60		FNQ-R-2.5
	460-3-60		FNQ-R-2
	575-3-60		FNQ-R-1.5
FU3 (24V)	380-3-60,460-3-60,575-3-60	200VA	FNM-10
	208/230-3-60		
FU5 & FU6	460-3-60,575-3-60	500VA	FNQ-R-2.5
	208/230-3-60,230-3-60		FNQ-R-3.5
FU4 (115V)	380-3-60,460-3-60,575-3-60	500VA	FNM-6
	208/230-3-60		
FB1 (NO MM)	380-3-60,460-3-60,575-3-60	NONE	LP-CC-20
	208/230-3-60		
FB1 (WITH MM)	380-3-60,460-3-60,575-3-60	NONE	KTK-R-15
	208/230-3-60		KTK-R-20
FB2	575-3-60	NONE	LP-CC-20
FB3	380-3-60,460-3-60,575-3-60	NONE	LP-CC-20
	208/230-3-60		

NOTES:
1. FACTORY WIRING IS IN ACCORDANCE WITH UL 1995 STANDARDS. ANY FIELD MODIFICATIONS OR ADDITIONS MUST BE IN COMPLIANCE WITH ALL APPLICABLE CODES.
2. USE 75°C MIN WIRE FOR FIELD POWER SUPPLY.
3. ALL FIELD INTERLOCK CONTACTS MUST HAVE A MIN RATING OF 2 AMPS @ 24VAC SEALED. SEE FIELD INTERLOCK WIRING.
4. COMPRESSOR AND FAN MOTORS ARE THERMALLY PROTECTED--THREE PHASE MOTORS PROTECTED AGAINST PRIMARY SINGLE PHASE CONDITIONS.
5. TERMINALS 13A,14 OF LVT ARE FOR FIELD CONNECTION OF REMOTE ON-OFF. THE CONTACT MUST BE RATED FOR DRY CIRCUIT APPLICATION CAPABLE OF HANDLING A 5VDC 1 MA TO 20 MA LOAD.
6. FOR 500 SERIES UNIT OPERATION AT 208-3-60V LINE VOLTAGE, TRAN1 PRIMARY CONNECTIONS MUST BE MOVED TO TERMINALS H3 & H4.
7. FOR 575-3-60V UNITS, FAN CIRCUIT BREAKER FCB2 IS REPLACED WITH FUSE BLOCK FB2.
8. FOR UNITS WITH LOW AMBIENT MOTOR MASTER V FIOP/ACCESSORY, 038-050: FAN CONTACTOR FC1 IS REPLACED WITH MOTORMASTER RELAY MMR. 055,060: FAN CONTACTOR FC3 IS REPLACED WITH MOTORMASTER RELAY MMR..
9. IF CHILLED WATER PUMP INTERLOCK IS USED, REMOVE JUMPER FROM TERMINAL 11 TO 17 AND WIRE INTERLOCK CONTACT ACROSS TERMINALS 11 & 17.
10. MP-A1 NOT USED IN THE FOLLOWING UNITS: 035-045: ALL UNITS 050-060: 460V UNITS WITHOUT DIGITAL SCROLL
11. MP-A2 NOT USED IN THE FOLLOWING UNITS: 035-045: ALL UNITS 050-060: 460V UNITS
12. MP-B1 NOT USED IN THE FOLLOWING UNITS: 035,040: ALL UNITS 045-060: 460V UNITS
13. MP-B2 NOT USED IN THE FOLLOWING UNITS: 035,040: ALL UNITS 045-060: 460V UNITS
14. JUMPER PLUG REQUIRED WHEN MP NOT USED

TABLE 1

VOLTAGE	SERIES	TERMINAL CONNECTIONS FOR PRIMARY SIDE
575-3-60	100	H1 & H2
380-3-60	200	H1 & H2
230-3-60	500	H2 & H4
208-3-60	500	H3 & H4
460-3-60	600	H1 & H4

TABLE 2

VOLTAGE	SERIES	TERMINAL CONNECTIONS FOR PRIMARY SIDE
575-3-60	100	COM & 575
380-3-60	200	COM & 380
230-3-60	500	COM & 230
208-3-60	500	COM & 208
460-3-60	600	COM & 460

* MM SIGNAL CONNECTION		
TB	VOLTAGE	HZ
1	208/230/460/575	60
13A	380	60

Fig. 9A — Typical Wiring Schematic, 30RAP035-060 Units — Power Wiring

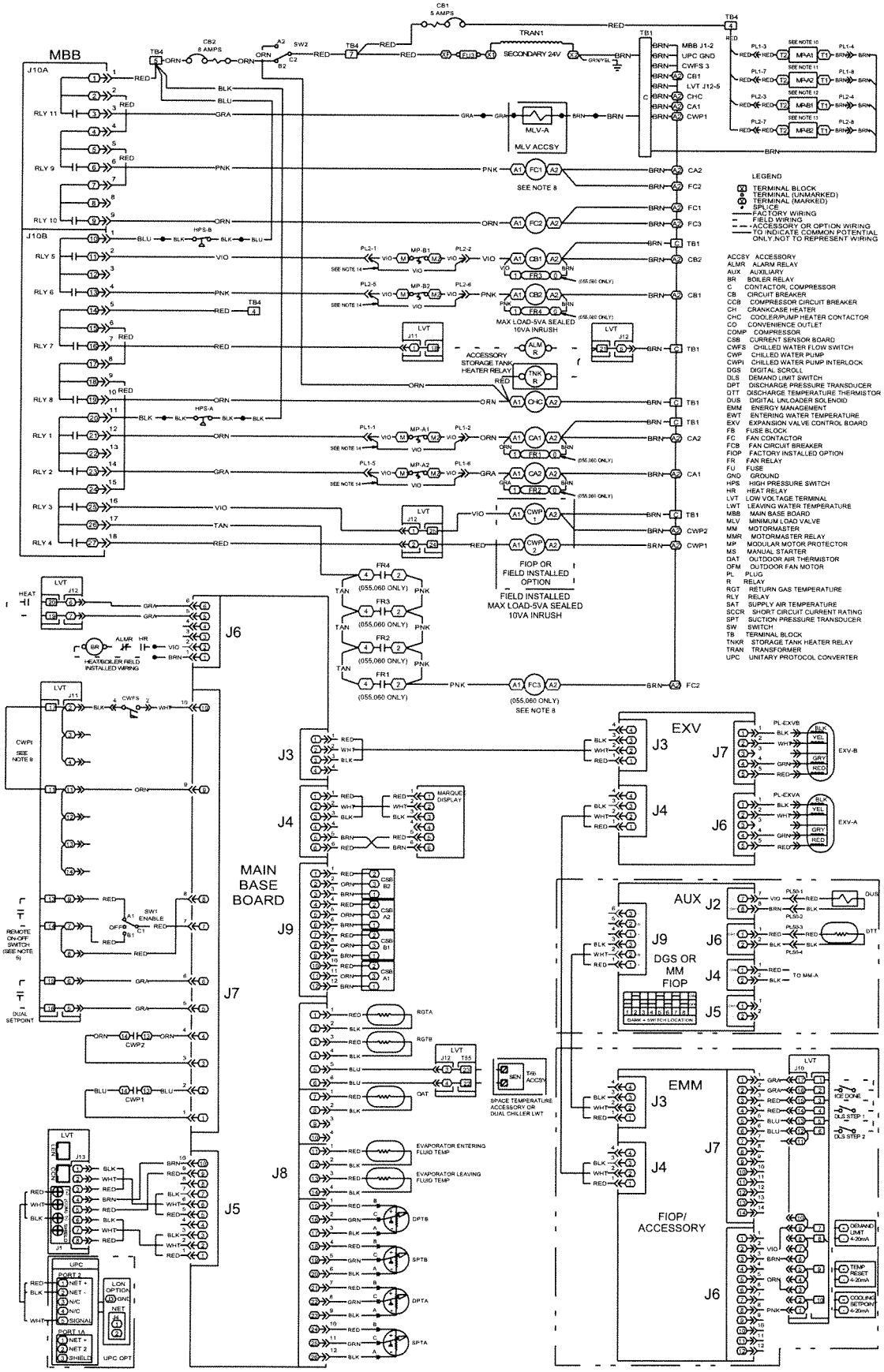

Fig. 9B — Typical Wiring Schematic, 30RAP035-060 Units — Control Wiring

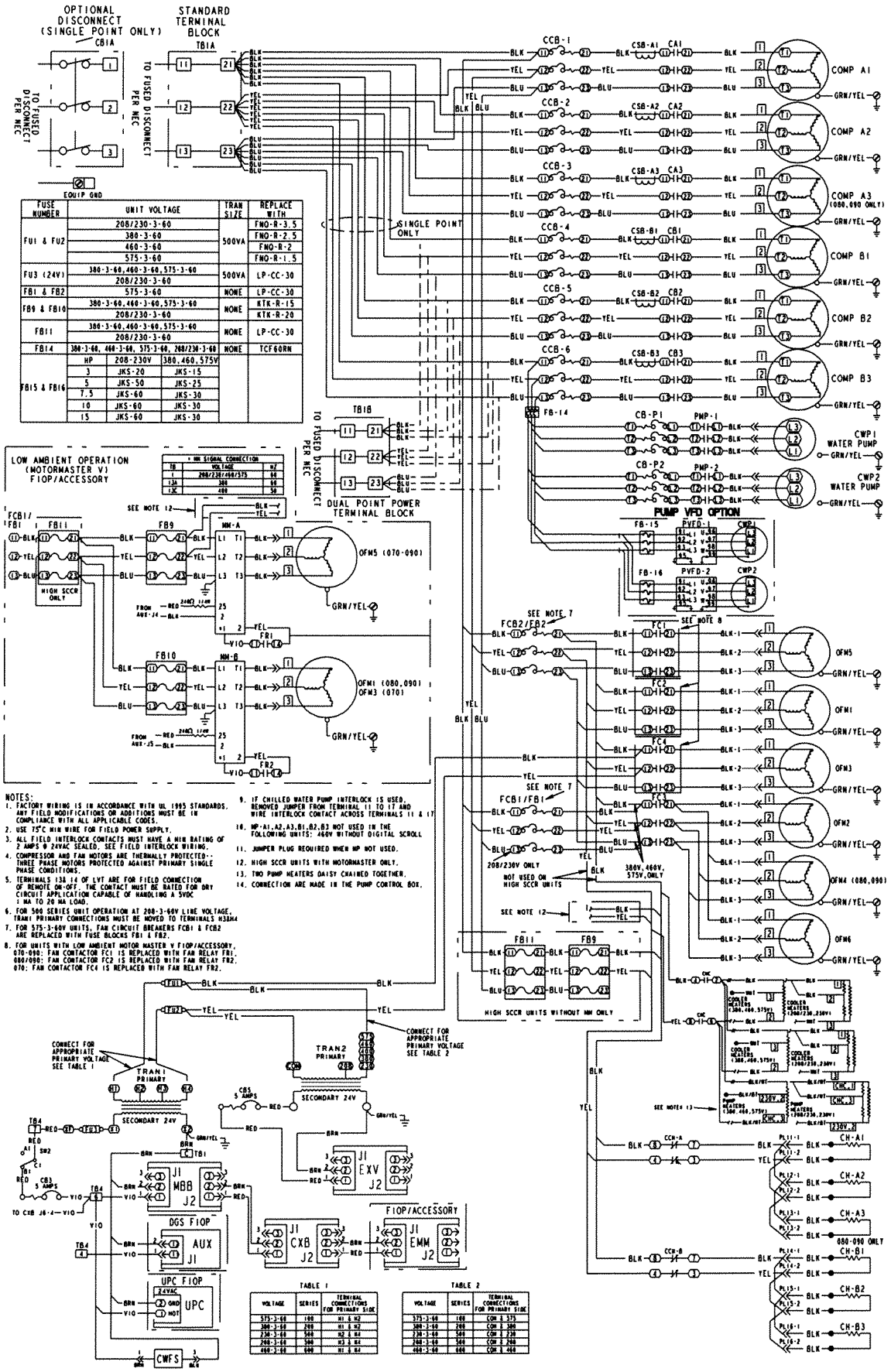

FUSE NUMBER	UNIT VOLTAGE			TRAN SIZE	REPLACE WITH
FU1 & FU2	208/230-3-60			500VA	FNQ-R-3.5
	380-3-60				FNQ-R-2.5
	460-3-60				FNQ-R-2
	575-3-60				FNQ-R-1.5
FU3 (24V)	380-3-60,460-3-60,575-3-60			500VA	LP-CC-30
	208/230-3-60				
FB1 & FB2	575-3-60			NONE	LP-CC-30
FB9 & FB10	380-3-60,460-3-60,575-3-60			NONE	KTK-R-15
	208/230-3-60				KTK-R-20
FB11	380-3-60,460-3-60,575-3-60			NONE	LP-CC-30
	208/230-3-60				
FB14	380-3-60, 460-3-60, 575-3-60, 208/230-3-60			NONE	TCF60RN
FB15 & FB16	HP	208-230V	380,460,575V		
	3	JKS-20	JKS-15		
	5	JKS-50	JKS-25		
	7.5	JKS-60	JKS-30		
	10	JKS-60	JKS-30		
	15	JKS-60	JKS-30		

+ MM SIGNAL CONNECTION		
TB	VOLTAGE	HZ
1	208/230/460/575	60
13A	380	50
13C	400	50

NOTES:
1. FACTORY WIRING IS IN ACCORDANCE WITH UL 1995 STANDARDS. ANY FIELD MODIFICATIONS OR ADDITIONS MUST BE IN COMPLIANCE WITH ALL APPLICABLE CODES.
2. USE 75°C MIN WIRE FOR FIELD POWER SUPPLY.
3. ALL FIELD INTERLOCK CONTACTS MUST HAVE A MIN RATING OF 2 AMPS @ 24VAC SEALED. SEE FIELD INTERLOCK WIRING.
4. COMPRESSOR AND FAN MOTORS ARE THERMALLY PROTECTED. THREE PHASE MOTORS PROTECTED AGAINST PRIMARY SINGLE PHASE CONDITIONS.
5. TERMINALS 13A 14 OF LVT ARE FOR FIELD CONNECTION OF REMOTE ON-OFF. THE CONTACT MUST BE RATED FOR DRY CIRCUIT APPLICATION CAPABLE OF HANDLING A 5VDC 1 MA TO 20 MA LOAD.
6. FOR 500 SERIES UNIT OPERATION AT 200-3-60V LINE VOLTAGE, TRAN1 PRIMARY CONNECTIONS MUST BE MOVED TO TERMINALS H3&H4
7. FOR 575-3-60V UNITS, FAN CIRCUIT BREAKERS FCB1 & FCB2 ARE REPLACED WITH FUSE BLOCKS FB1 & FB2.
8. FOR UNITS WITH LOW AMBIENT MOTOR MASTER V FIOP/ACCESSORY, 070-090: FAN CONTACTOR FC1 IS REPLACED WITH FAN RELAY FR1. 080/090: FAN CONTACTOR FC2 IS REPLACED WITH FAN RELAY FR2. 070: FAN CONTACTOR FC4 IS REPLACED WITH FAN RELAY FR2.
9. IF CHILLED WATER PUMP INTERLOCK IS USED, REMOVED JUMPER FROM TERMINAL 11 TO 17 AND WIRE INTERLOCK CONTACT ACROSS TERMINALS 11 & 17
10. WP-A1,A2,A3,B1,B2,B3 NOT USED IN THE FOLLOWING UNITS: 460V WITHOUT DIGITAL SCROLL
11. JUMPER PLUG REQUIRED WHEN WP NOT USED.
12. HIGH SCCR UNITS WITH MOTORMASTER ONLY.
13. TWO PUMP HEATERS DAISY CHAINED TOGETHER.
14. CONNECTION ARE MADE IN THE PUMP CONTROL BOX.

TABLE 1

VOLTAGE	SERIES	TERMINAL CONNECTIONS FOR PRIMARY SIDE
575-3-60	100	H1 & H2
380-3-60	200	H1 & H2
230-3-60	500	H2 & H4
200-3-60	500	H2 & H4
460-3-60	600	H1 & H4

TABLE 2

VOLTAGE	SERIES	TERMINAL CONNECTIONS FOR PRIMARY SIDE
575-3-60	100	COM & 575
380-3-60	200	COM & 380
230-3-60	500	COM & 230
200-3-60	500	COM & 200
460-3-60	600	COM & 460

Fig. 10A — Typical Wiring Schematic, 30RAP070-090 Units — Power Wiring

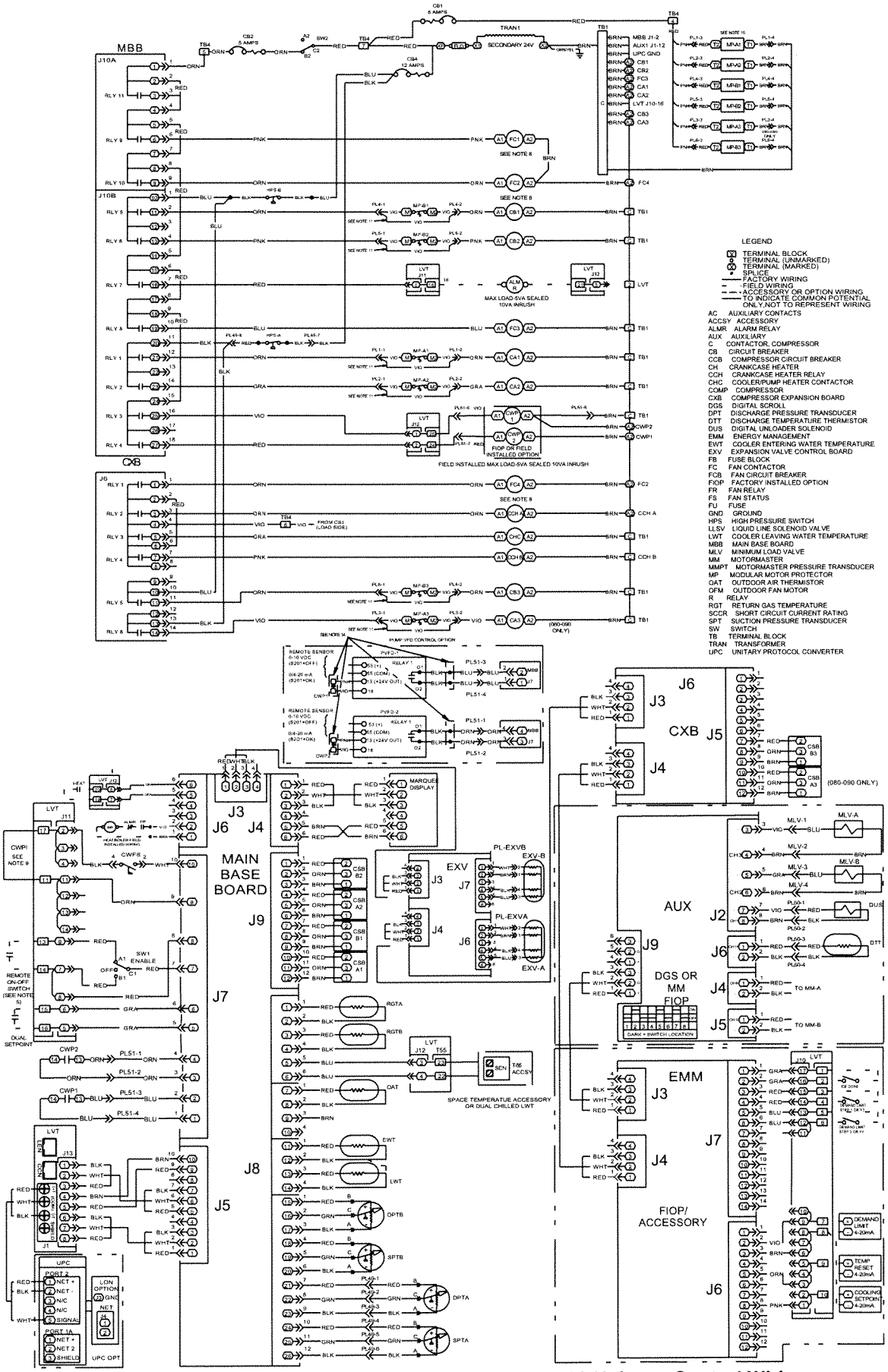

Fig. 10B — Typical Wiring Schematic, 30RAP070-090 Units — Control Wiring

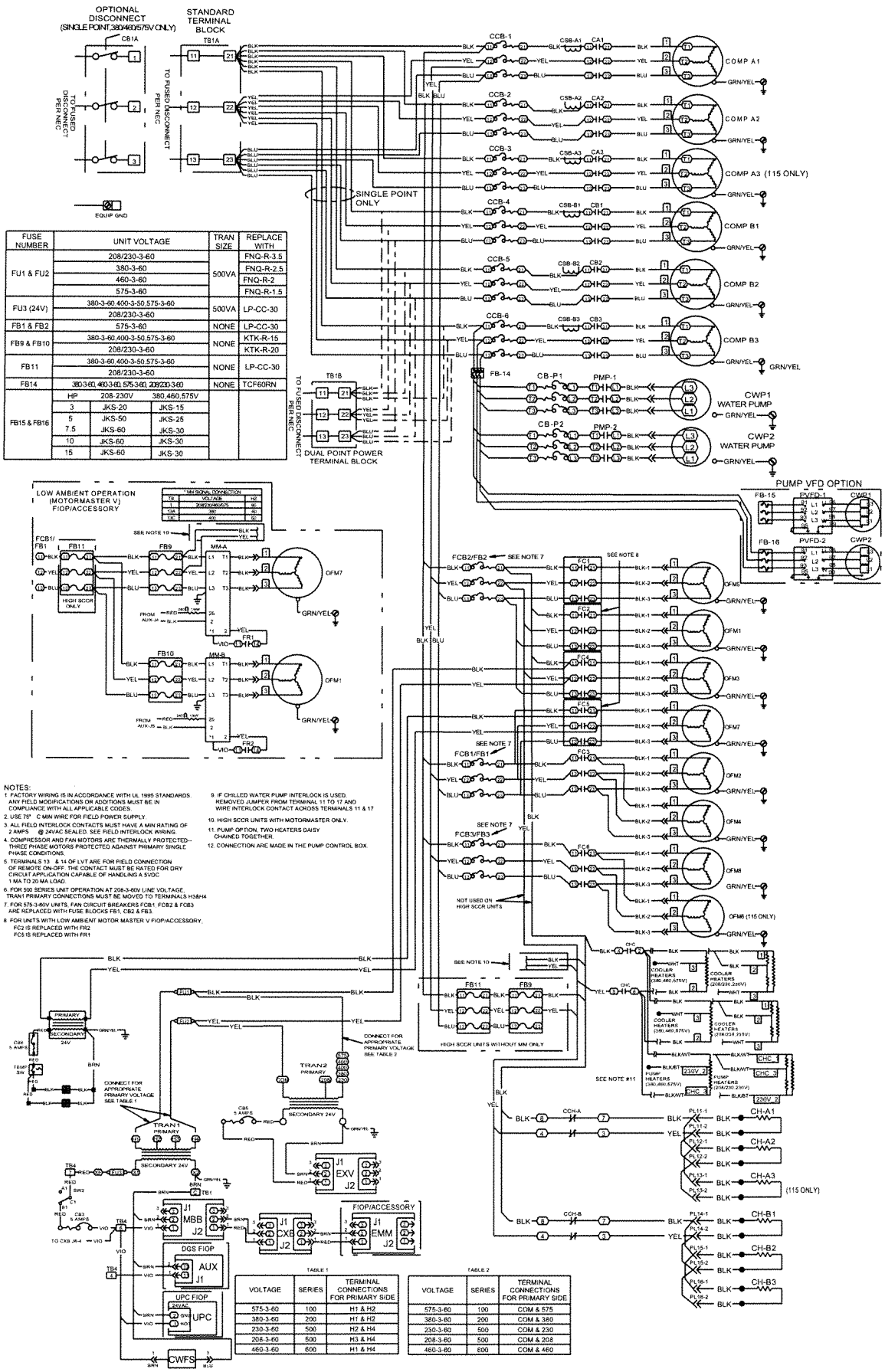

FUSE NUMBER	UNIT VOLTAGE			TRAN SIZE	REPLACE WITH
FU1 & FU2	208/230-3-60			500VA	FNQ-R-3.5
	380-3-60				FNQ-R-2.5
	460-3-60				FNQ-R-2
	575-3-60				FNQ-R-1.5
FU3 (24V)	380-3-60,400-3-50,575-3-60			500VA	LP-CC-30
	208/230-3-60				
FB1 & FB2	575-3-60			NONE	LP-CC-30
FB9 & FB10	380-3-60,400-3-50,575-3-60			NONE	KTK-R-15
	208/230-3-60				KTK-R-20
FB11	380-3-60,400-3-50,575-3-60			NONE	LP-CC-30
	208/230-3-60				
FB14	380-3-60,460-3-60,575-3-60,208/230-3-60			NONE	TCF60RN
FB15 & FB16	HP	208-230V	380,460,575V		
	3	JKS-20	JKS-15		
	5	JKS-50	JKS-25		
	7.5	JKS-60	JKS-30		
	10	JKS-60	JKS-30		
	15	JKS-60	JKS-30		

NOTES:
1. FACTORY WIRING IS IN ACCORDANCE WITH UL 1995 STANDARDS. ANY FIELD MODIFICATIONS OR ADDITIONS MUST BE IN COMPLIANCE WITH ALL APPLICABLE CODES.
2. USE 75° C MIN WIRE FOR FIELD POWER SUPPLY.
3. ALL FIELD INTERLOCK CONTACTS MUST HAVE A MIN RATING OF 2 AMPS @ 24VAC SEALED. SEE FIELD INTERLOCK WIRING.
4. COMPRESSOR AND FAN MOTORS ARE THERMALLY PROTECTED--THREE PHASE MOTORS PROTECTED AGAINST PRIMARY SINGLE PHASE CONDITIONS.
5. TERMINALS 13 & 14 OF LVT ARE FOR FIELD CONNECTION OF REMOTE ON-OFF. THE CONTACT MUST BE RATED FOR DRY CIRCUIT APPLICATION CAPABLE OF HANDLING A 5VDC 1 MA TO 20 MA LOAD.
6. FOR 500 SERIES UNIT OPERATION AT 208-3-60V LINE VOLTAGE, TRAN1 PRIMARY CONNECTIONS MUST BE MOVED TO TERMINALS H3&H4.
7. FOR 575-3-60V UNITS, FAN CIRCUIT BREAKERS FCB1, FCB2 & FCB3 ARE REPLACED WITH FUSE BLOCKS FB1, CB2 & FB3.
8. FOR UNITS WITH LOW AMBIENT MOTOR MASTER V FIOP/ACCESSORY, FC2 IS REPLACED WITH FR2 FC5 IS REPLACED WITH FR1
9. IF CHILLED WATER PUMP INTERLOCK IS USED, REMOVED JUMPER FROM TERMINAL 11 TO 17 AND WIRE INTERLOCK CONTACT ACROSS TERMINALS 11 & 17
10. HIGH SCCR UNITS WITH MOTORMASTER ONLY.
11. PUMP OPTION, TWO HEATERS DAISY CHAINED TOGETHER.
12. CONNECTION ARE MADE IN THE PUMP CONTROL BOX.

TABLE 1

VOLTAGE	SERIES	TERMINAL CONNECTIONS FOR PRIMARY SIDE
575-3-60	100	H1 & H2
380-3-60	200	H1 & H2
230-3-60	500	H2 & H4
208-3-60	500	H3 & H4
460-3-60	600	H1 & H4

TABLE 2

VOLTAGE	SERIES	TERMINAL CONNECTIONS FOR PRIMARY SIDE
575-3-60	100	COM & 575
380-3-60	200	COM & 380
230-3-60	500	COM & 230
208-3-60	500	COM & 208
460-3-60	600	COM & 460

Fig. 11A — Typical Wiring Schematic, 30RAP100,115 Units — Power Wiring

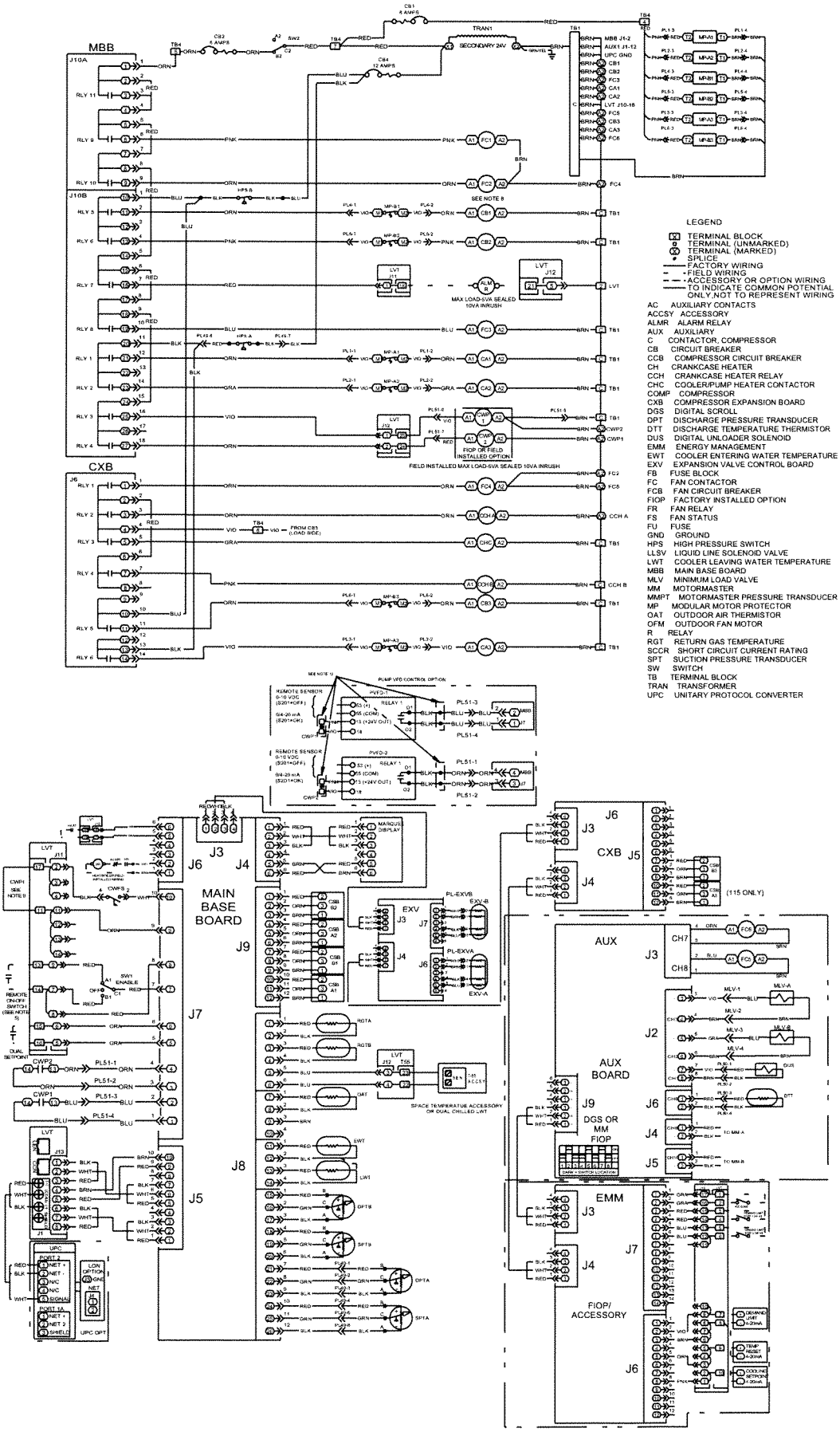

Fig. 11B — Typical Wiring Schematic, 30RAP100,115 Units — Control Wiring

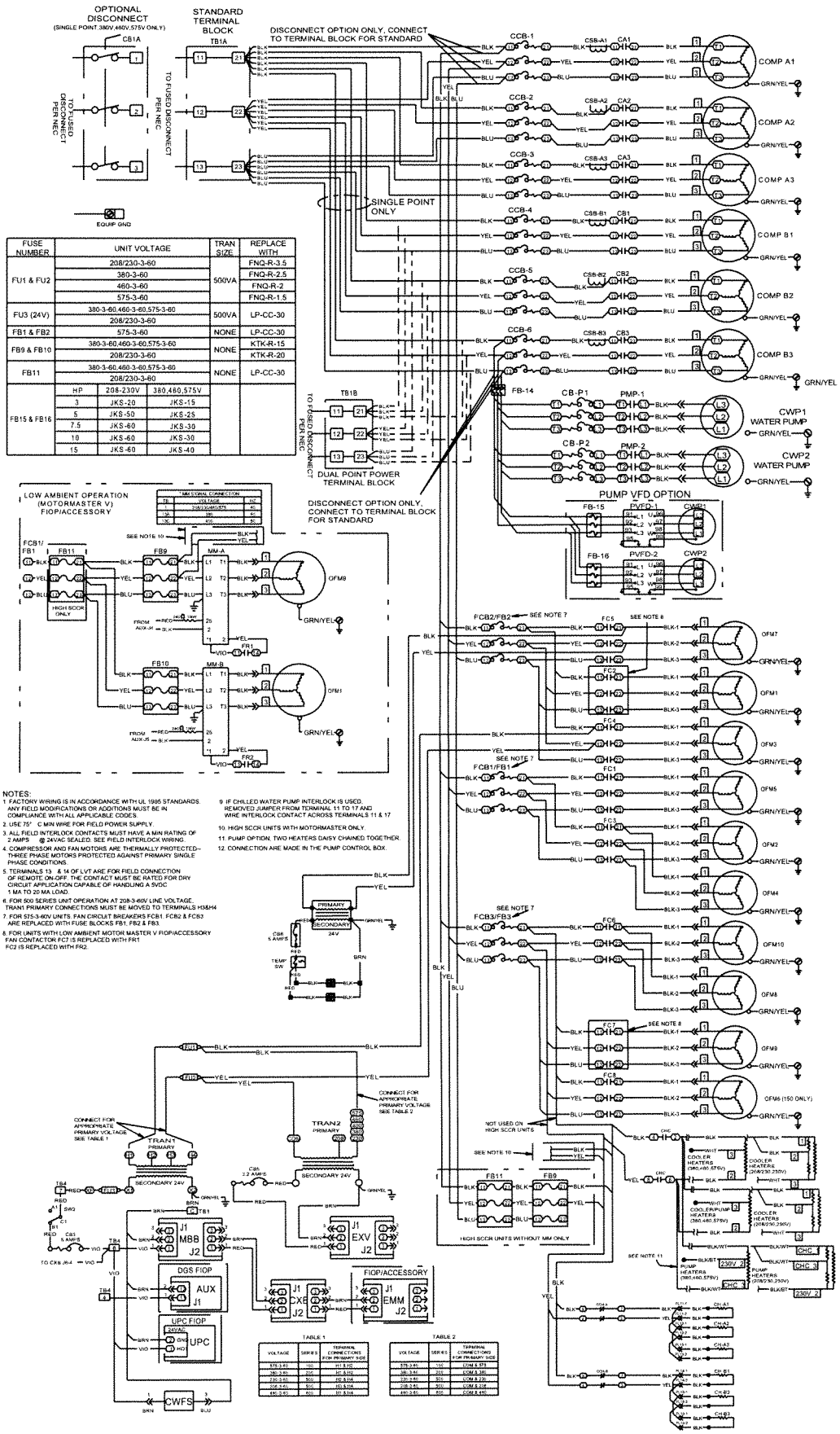

FUSE NUMBER	UNIT VOLTAGE	TRAN SIZE	REPLACE WITH
FU1 & FU2	208/230-3-60	500VA	FNQ-R-3.5
	380-3-60		FNQ-R-2.5
	460-3-60		FNQ-R-2
	575-3-60		FNQ-R-1.5
FU3 (24V)	380-3-60,460-3-60,575-3-60	500VA	LP-CC-30
	208/230-3-60		
FB1 & FB2	575-3-60	NONE	LP-CC-30
FB9 & FB10	380-3-60,460-3-60,575-3-60	NONE	KTK-R-15
	208/230-3-60		KTK-R-20
FB11	380-3-60,460-3-60,575-3-60	NONE	LP-CC-30
	208/230-3-60		

FB15 & FB16	HP	208-230V	380,460,575V
	3	JKS-20	JKS-15
	5	JKS-50	JKS-25
	7.5	JKS-60	JKS-30
	10	JKS-60	JKS-30
	15	JKS-60	JKS-40

NOTES:

1. FACTORY WIRING IS IN ACCORDANCE WITH UL 1995 STANDARDS. ANY FIELD MODIFICATIONS OR ADDITIONS MUST BE IN COMPLIANCE WITH ALL APPLICABLE CODES.
2. USE 75° C MIN WIRE FOR FIELD POWER SUPPLY.
3. ALL FIELD INTERLOCK CONTACTS MUST HAVE A MIN RATING OF 2 AMPS @ 24VAC SEALED. SEE FIELD INTERLOCK WIRING.
4. COMPRESSOR AND FAN MOTORS ARE THERMALLY PROTECTED--THREE PHASE MOTORS PROTECTED AGAINST PRIMARY SINGLE PHASE CONDITIONS.
5. TERMINALS 13 & 14 OF LVT ARE FOR FIELD CONNECTION OF REMOTE ON-OFF. THE CONTACT MUST BE RATED FOR DRY CIRCUIT APPLICATION CAPABLE OF HANDLING A 5VDC 1 MA TO 20 MA LOAD.
6. FOR 500 SERIES UNIT OPERATION AT 208-3-460V LINE VOLTAGE, TRAN1 PRIMARY CONNECTIONS MUST BE MOVED TO TERMINALS H3&H4
7. FOR 575-3-60V UNITS FAN CIRCUIT BREAKERS FCB1, FCB2 & FCB3 ARE REPLACED WITH FUSE BLOCKS FB1, FB2 & FB3.
8. FOR UNITS WITH LOW AMBIENT MOTOR MASTER V FIOP/ACCESSORY FAN CONTACTOR FC7 IS REPLACED WITH FR1 FC2 IS REPLACED WITH FR2.
9. IF CHILLED WATER PUMP INTERLOCK IS USED, REMOVED JUMPER FROM TERMINAL 11 TO 17 AND WIRE INTERLOCK CONTACT ACROSS TERMINALS 11 & 17
10. HIGH SCCR UNITS WITH MOTORMASTER ONLY.
11. PUMP OPTION. TWO HEATERS DAISY CHAINED TOGETHER.
12. CONNECTION ARE MADE IN THE PUMP CONTROL BOX.

Fig. 12A — Typical Wiring Schematic, 30RAP130-150 Units — Power Wiring

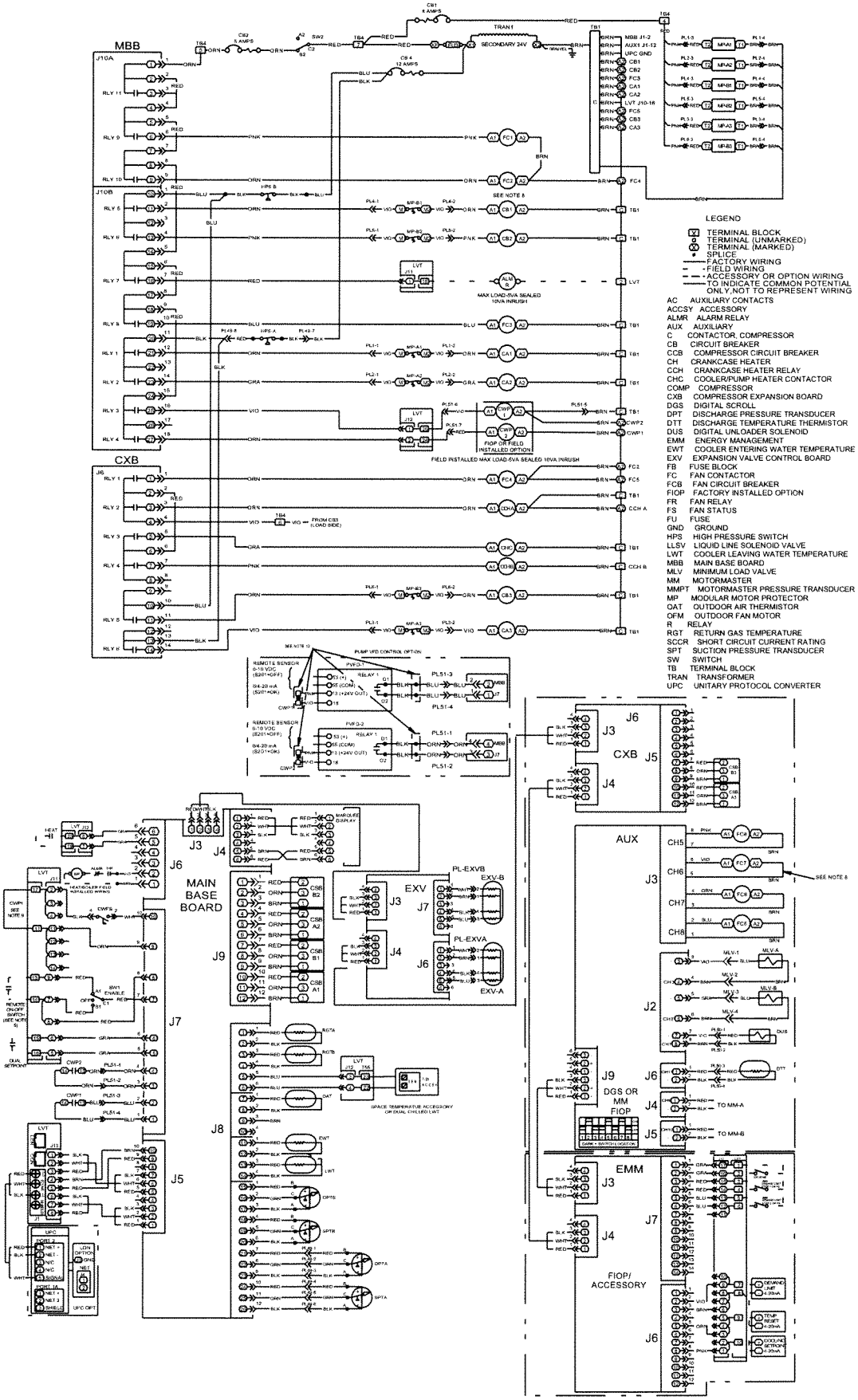

Fig. 12B — Typical Wiring Schematic, 30RAP130-150 Units — Control Wiring

LEGEND FOR FIG. 3-12B

ALMR — Alarm Relay
AUX — Auxiliary
BR — Boiler Relay
C — Contactor, Compressor
CB — Circuit Breaker
CCB — Compressor Circuit Breaker
CH — Crankcase Heater
CHC — Cooler/Pump Heater Contactor
COMP — Compressor
CSB — Current Sensor Board
CWFS — Chilled Water Flow Switch
CWP — Chilled Water Pump
CXB — Compressor Expansion Board
DGS — Digital Scroll Compressor
DPT — Discharge Pressure Transducer
DTT — Discharge Temperature Thermistor
DUS — Digital Unloader Solenoid
EMM — Energy Management
EWT — Entering Water Temperature
EXV — Electronic Expansion Valve
FB — Fuse Block
FC — Fan Contactor
FCB — Fan Circuit Breaker
FIOP — Factory Installed Option
FR — Fan Relay
FU — Fuse
GND — Ground
HPS — High-Pressure Switch
HR — Heat Relay
LON — Local Operating Network
LVT — Low Voltage Terminal Block
LWT — Leaving Water Temperature
MBB — Main Base Board
MLV — Minimum Load Valve
MM — Motormaster
MP — Motor Protector
MS — Manual Starter
NEC — National Electrical Code
OAT — Outdoor-Air Thermistor
OFM — Outdoor Fan Motor
RGT — Return Gas Thermistor
SCCR — Short Circuit Current Rating
SPT — Suction Pressure Transducer
SW — Switch
TB — Terminal Block
TNKR — Storage Tank Heater Relay
TRAN — Transformer
UPC — Unitary Protocol Converter
VFD — Variable Frequency Drive

[x] Terminal Block
○ Terminal (Unmarked)
⟨x⟩ Terminal (Marked)
● Splice
——— Factory Wiring
- - - - Field Wiring
—— - —— Accessory or Option Wiring
▬▬ To indicate common potential only; not to represent wiring.

Main Base Board (MBB) — See Fig. 13. The MBB is the heart of the *Comfort*Link control system. It contains the major portion of operating software and controls the operation of the machine. The MBB continuously monitors input/output channel information received from its inputs and from all other modules. The MBB receives inputs from the discharge and suction pressure transducers and thermistors. See Table 4. The MBB also receives the feedback inputs from each compressor current sensor board and other status switches. See Tables 5A and 5B. The MBB also controls several outputs. Relay outputs controlled by the MBB are shown in Tables 6A and 6B. Information is transmitted between modules via a 3-wire communication bus or LEN (Local Equipment Network). The CCN (Carrier Comfort Network) bus is also supported. Connections to both LEN and CCN buses are made at the LVT (low voltage terminal). See Fig. 13 and 14.

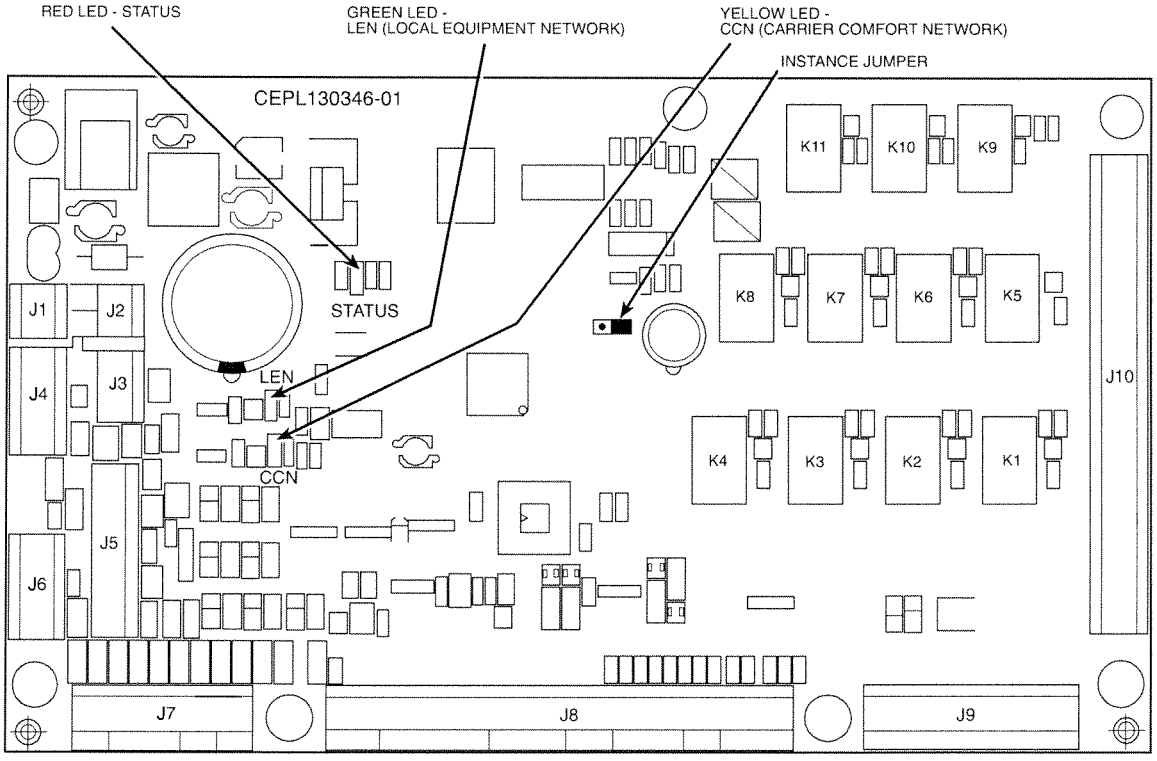

Fig. 13 — Main Base Board

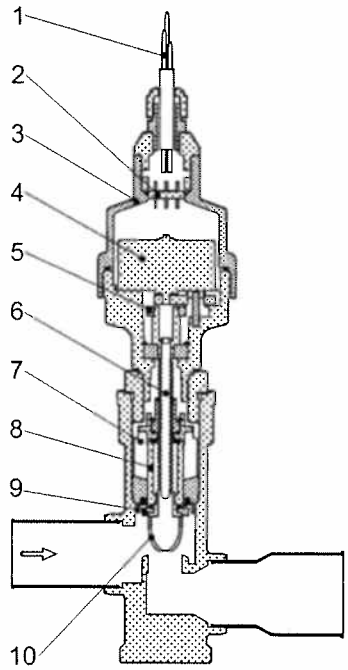

1. Cable
2. Glass Seal
3. Motor Housing
4. Stepper Motor
5. Bearing
6. Lead Screw
7. Insert
8. Valve Piston
9. Valve Seat
10. Valve Port

Fig. 30 — Cutaway View of the Electronic Expansion Valve (Size 070-150 Shown)

⚠CAUTION

Do not disconnect EXV connector with power applied to the board. Damage to the board may result if disconnected while under power. DO NOT short meter leads together or pin 3 to any other pin as board damage will occur.

During the next several seconds, carefully connect the negative test lead to pins 1,2,4 and 5 in succession (plug J6 for Circuit A, plug J7 for Circuit B). Digital voltmeters will average this signal and display approximately 6 vdc. If it remains constant at a voltage other than 6 VDC or shows 0 volts, remove the connector to the valve and recheck.

Press [ENTER] and select 0% to close the valve. Check the 4 position DIP switch on the board (all switches should be set to On). If a problem still exists, replace the EXV board. If the reading is correct, the expansion valve and EXV wiring should be checked.

1. Check color coding and wire connections. Make sure they are connected to the correct terminals at the EXV board and EXV plug and that the cables are not crossed.
2. Check for continuity and tight connection at all pin terminals.
3. If the motor fails to operate properly, check the resistance of each motor phase. Remove the EXV Board connector (J6 for Circuit A, J7 for Circuit B). Check the resistance of the two windings. Resistance between pins 1 and 2 for one winding or between pins 4 and 5 for the other winding should be approximately 100 ± 10 ohms (sizes 010-060) or 52 ± 5.2 ohms (sizes 070-150). Differences of more than 10% between windings indicate a defective motor. Resistance between any lead and ground should be infinite or "open." Any resistance reading will indicate a shorted winding and the valve will need to be replaced.

FIELD SERVICING INSTRUCTIONS — The EXV valves on sizes 025, 030, and 050-150 can be serviced. See Fig. 30 for a cutaway view of the EXV for sizes 070-150. Motor kits for the EXV valve on sizes 025, 030, and 050-150 are available as replacement parts. The EXV valves on sizes 010-020 and 035-045 are hermetic and cannot be disassembled for installation or during service.

EXV VALVE REPLACEMENT (ALL SIZES) — To replace the valve, perform the following procedure:

1. Be sure the refrigerant has been recovered from the circuit.
2. Disconnect the EXV cable from the EXV. For sizes 010-060, refer to Fig. 32 and remove the EXV retainer clip, taking care not to damage the clip as it will be required for installation later.
3. The valve may be replaced by cutting the piping. A tubing cutter must be used to prevent creating contaminants in the piping.
4. The EXVs have copper connections and any brazing alloy can be used to install the valve. During installation the torch flame should be directed away from the valve body and cable. The valve body should be wrapped with a wet cloth during the brazing operation. Be sure to use a nitrogen purge while brazing the valve in place.
5. Check for refrigerant leaks.
6. Once the valve body has cooled, reconnect the EXV cable. Care should be taken to ensure engagement of the alignment key. On sizes 010-060, install the EXV cable retainer clip.
7. Check the operation of the valve using the Service Test listed above.

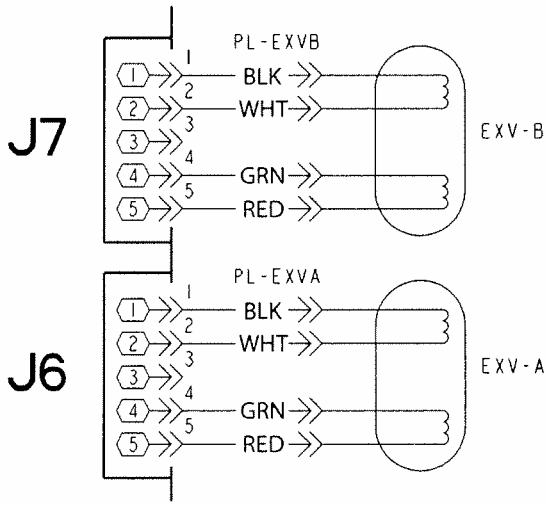

Fig. 31A — 30RAP010-060 EXV Cable Connections to EXV Module

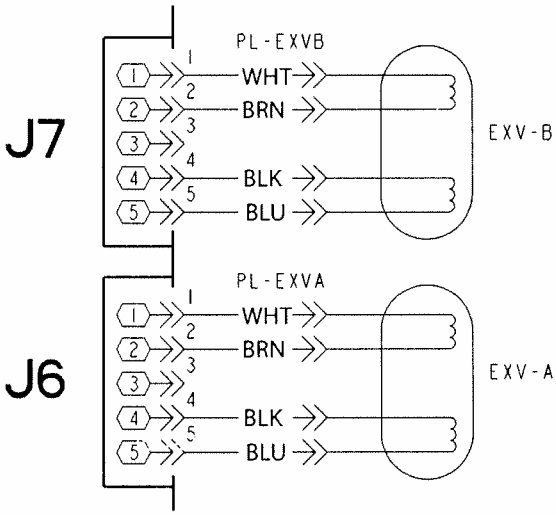

Fig. 31B — 30RAP070-150 EXV Cable Connections to EXV Module

VALVE MOTOR REPLACEMENT

Sizes 025, 030, and 050-060

IMPORTANT: Obtain replacement gasket before opening EXV. Do not re-use gaskets.

Perform the following procedure to replace the EXV motor:

1. Be sure the refrigerant has been recovered from the circuit.
2. Remove power from the EXV board.
3. Refer to Fig. 32 and remove the EXV retainer clip, taking care not to damage the clip as it will be required for installation later.
4. Using a wrench and back-up wrench, remove the motor assembly from the EXV body, by placing the back-up wrench on the valve body.
5. To install the motor, be sure to use a new gasket. Connect the EXV cable to the EXV motor assembly.
6. Use Service Test to open the EXV to 100%. This will retract the piston fully. Remove power from the EXV board prior to removing the EXV cable. Remove the EXV cable from the motor prior to installation. For 025, 030, 050-060 sizes, replacement motors are shipped in the retracted position and may be installed as received; therefore, this step may be skipped if installing a new motor.

⚠CAUTION

If the existing motor has been removed for inspection or cleaning, be sure that the piston is fully retracted into the motor assembly before installation on the valve. Failure to do so will permanently damage the drive and motor. Replacement motor assemblies are shipped in the retracted position and may be installed as received.

7. Lightly oil the threads and gasket on the new motor. Carefully seat the motor on the valve body. Using a wrench and back-up wrench as described above, tighten the motor assembly as follows: one eighth turn more than hand tight is sufficient to achieve a leak proof seal.
8. After the motor is tightened, the cable should be replaced on the valve. Care should be taken to ensure engagement of the alignment key. Install the EXV cable retainer clip (see Fig. 32).
9. Pressurize the system and check for leaks.
10. Reapply control power and test the operation using Service Test operation listed above.

Sizes 070-150

IMPORTANT: Obtain replacement gasket before opening EXV. Do not re-use gaskets.

Perform the following procedure to replace the EXV motor:

1. Be sure the refrigerant has been recovered from the circuit.
2. On sizes 070-150, open the EXV to 100% using the procedure stated above.
3. Remove power from the EXV board and then disconnect the EXV Cable from the EXV.
4. Using a wrench and back-up wrench, remove the motor assembly from the EXV body. Be sure to place the back-up wrench on the adapter to remove the motor as shown in Fig. 33.
5. To install the motor, be sure to use a new gasket.
6. Manually depress the valve piston before installing the motor assembly. This will allow for the lead screw to engage the piston as the motor is installed.
7. Lightly oil the threads and gasket on the new motor. Carefully seat the motor on the valve body. Using a wrench and back-up wrench as described above, tighten the motor assembly as follows: Tighten the motor to 36 ft-lb (50 N-m) and then tighten an additional 30 degrees as indicated in Fig. 33.
8. After the motor is tightened, the cable should be replaced on the valve. Care should be taken to ensure engagement of the alignment key. Pressurize the system and check for leaks.
9. Reapply control power and test the operation using Service Test operation listed above.

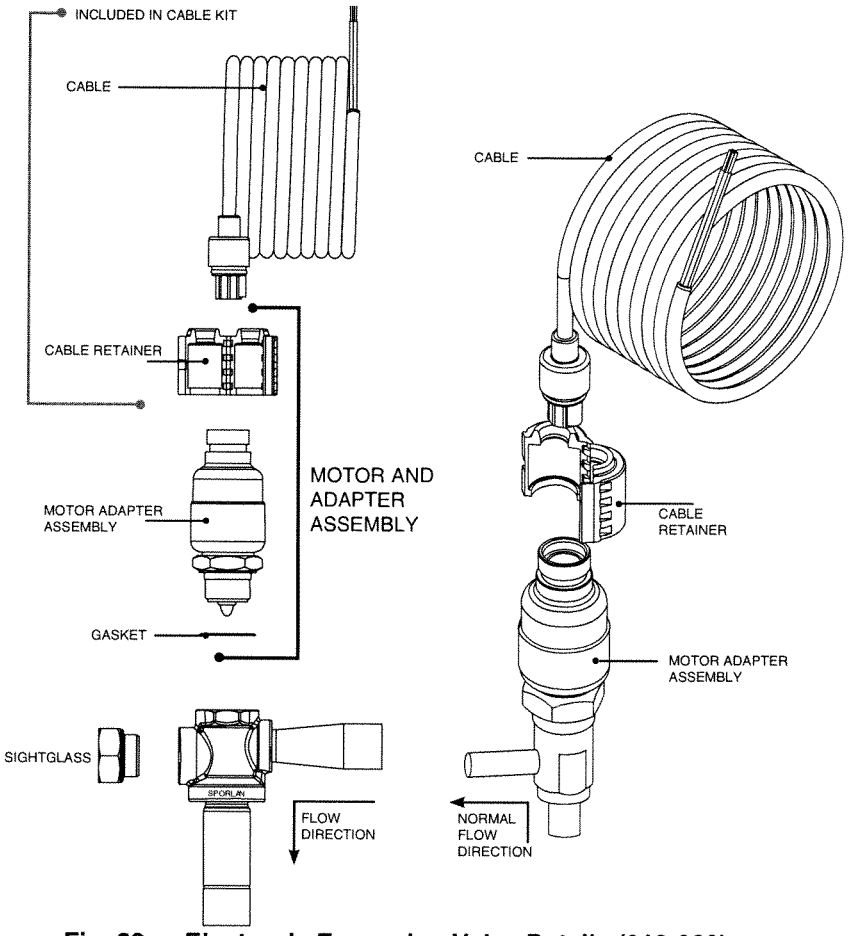

Fig. 32 — Electronic Expansion Valve Details (010-060)

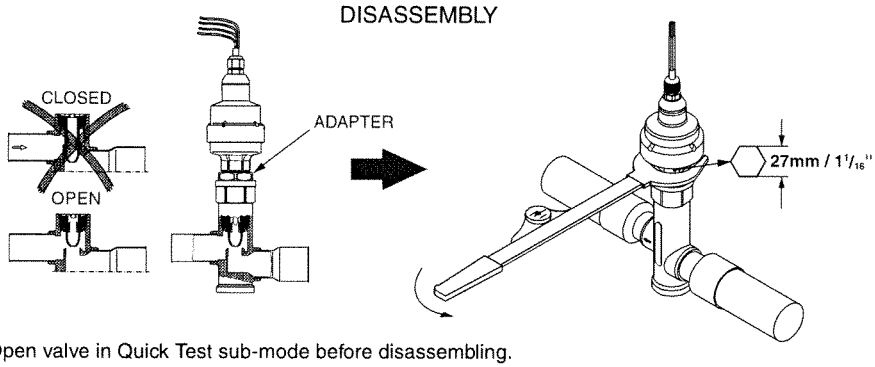

NOTE: Open valve in Quick Test sub-mode before disassembling.

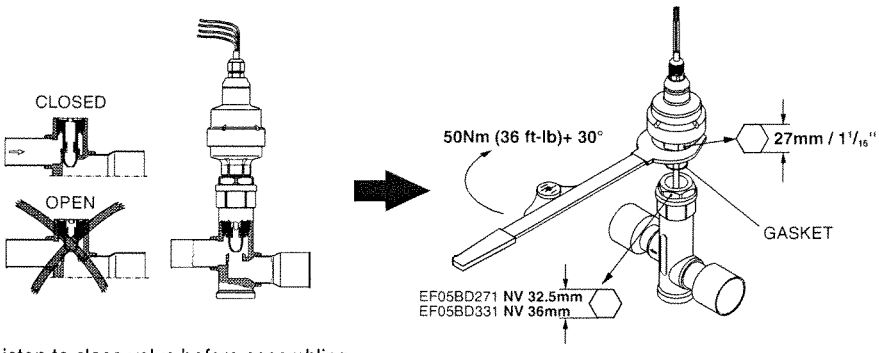

NOTES:
1. Push down on valve piston to close valve before assembling.
2. After valve is assembled close valve in Quick Test sub-mode or cycle power before opening service valve.

Fig. 33 — Disassembly and Assembly of EXV Motor (070-150)

Compressor Replacement (Fig. 34-36) — All models contain scroll compressors and have from one to six compressors. The size 010-030 units are a single refrigeration circuit while sizes 035-150 are dual circuit. A compressor is most easily removed from the front of the unit, depending on where clearance space was allowed during unit installation.

Remove the junction box cover bolts and disconnect the compressor power and ground connections. Remove the cable from the compressor junction box. Remove the connections from the high-pressure switch. Knock the same holes out of the new compressor junction box and install the cable connectors from the old compressor.

The compressors are bolted to rails, which are in turn bolted to the unit basepan for all sizes except 010 and 015 which are directly bolted to the basepan. Remove the 4 bolts holding the compressor to the rail on the basepan. Save the mounting hardware for use with the new compressor. Carefully cut the compressor suction and discharge lines with a tubing cutter as close to the compressor as feasible. Remove high-pressure switch and pressure transducer(s) if required for compressor removal. Lift one corner of the compressor at a time and remove all the rubber mounting grommets (single compressor circuits) or steel spacers (dual compressor circuits). Remove the old compressor from the unit.

Slide the new compressor in place on the basepan. Lifting one side of the compressor at a time, replace all of the compressor mounting grommets. Using new tubing as required, reconnect compressor suction and discharge lines. Using hardware saved, reinstall the mounting bolts and washers through the compressor feet. Using proper techniques, braze suction and discharge lines and check for leaks. Reconnect oil equalization line on dual compressor circuit models.

Reconnect the compressor power connections and high-pressure switch wiring as on the old compressor. Refer to Fig. 34-36. Following the installation of the new compressor, tighten all hardware to the following specifications. (See Table 23.)

Table 23 — Unit Torque Specification

FASTENER	RECOMMENDED TORQUE
Compressor Mounting Bolts	7 to 10 ft-lb (9.5 to 13.5 N-m)
Compressor Power Connections	24 to 28 in.-lb (2.7- to 3.2 N-m)
Compressor Ground Terminal Connections	14 to 18 in.-lb (1.6 to 2.0 N-m)

Cooler

BRAZED-PLATE COOLER HEAT EXCHANGER REPLACEMENT — Brazed-plate heat exchangers cannot be repaired if they develop a leak. If a leak (refrigerant or water) develops, the heat exchanger **must be** replaced. To replace a brazed-plate heat exchanger:

1. Check that the replacement heat exchanger is the same as the original heat exchanger. The unit insulation covers the manufacturer's part number. Make sure the depths of the replacement and original cooler heat exchangers are the same.
2. Disconnect the liquid-in and liquid-out connections at the heat exchanger.
3. Recover the refrigerant from the system, and unsolder the refrigerant-in and refrigerant-out connections.
4. Remove the old heat exchanger. The replacement heat exchanger is supplied fully insulated. It also includes a cooler heater. Use of the heater is not required unless the original cooler contained a factory-installed heater.
5. Install the replacement heat exchanger in the unit and attach the mounting bracket hardware to the fan uprights (sizes 010-030) or to the bottom bracket (sizes 035-150) using the hardware removed in Step 4. Reconnect the cooler heater if required. For sizes 010-025, torque the bolts to 7-10 ft-lb. For sizes 030-150, torque the bolts to 30-50 ft-lb.
6. *Carefully* braze the refrigerant lines to the connections on the heat exchanger. Lines should be soldered using silver as the soldering material with a minimum of 45% silver. Keep the temperature below 1472 F (800 C) under normal soldering conditions (no vacuum) to prevent the copper solder of the brazed plate heat exchanger from changing its structure. Failure to do so can result in internal or external leakage at the connections which cannot be repaired. Braze the liquid lines with a heat sink around the expansion valve to protect it from excess heat.
7. Reconnect the water/brine lines.
8. Dehydrate and recharge the unit. Check for leaks.

BRAZED-PLATE COOLER HEAT EXCHANGER CLEANING — Brazed-plate heat exchangers must be cleaned chemically. A professional cleaning service skilled in chemical cleaning should be used. Use a weak acid (5% phosphoric acid, or if the heat exchanger is cleaned frequently, 5% oxalic acid). Pump the cleaning solution through the exchanger, preferably in a backflush mode. After cleaning, rinse with large amounts of fresh water to dispose of all the acid. Cleaning materials must be disposed of properly.

The factory-installed strainer screen in front of the water/brine inlets of the heat exchangers should be cleaned periodically, depending on condition of the chiller water/brine.

Oil Charge

⚠ CAUTION

The compressor in a Puron® refrigerant (R-410A) system uses a polyol ester (POE) oil. This is extremely hygroscopic, meaning it absorbs water readily. POE oils can absorb 15 times as much water as other oils designed for HCFC and CFC refrigerants. Take all necessary precautions to avoid exposure of the oil to the atmosphere. Failure to do so could result in possible equipment damage.

Puron refrigerant systems use a polyol ester (POE) oil. Use only Carrier-approved compressor oil. Oil should be visible in compressor oil sight glass. An acceptable oil level is from $^1/_8$ to $^3/_8$ of sight glass for unit size 010-090, and $^3/_4$ to $^7/_8$ of sight glass for unit size 100-150. All compressors must be off when checking oil level. Recommended oil level adjustment method is as follows:

ADD OIL — Recover charge from the unit. Add oil to suction line Schrader valve on tandem compressors sets and the compressor Schrader on the three-compressor circuits and single-compressor circuits. (See Fig. 34-36.) When oil can be seen at the bottom of the sight glass, add oil in 5 oz increments which is approximately $^1/_8$ in oil level. Run all compressors for 20 minutes then shut off to check oil level. Repeat procedure until acceptable oil level is present.

NOTE: Use only Carrier-approved compressor oil.

- Oil Type . . . . . Inhibited polyol ester-based synthetic compressor lubricant.
- ISO Viscosity Grade 32

  Approved sources are:

  UNIT SIZES 010-090

  MANUFACTURER OIL

  Totaline . . . . . 3MAF POE, P903-1601

  Mobil . . . . . EAL Arctic 32-3MA

  Uniqema RL32-3MAF

value read by the control in the Temperatures mode using the scrolling marquee display.

Pressure Transducers — The suction and discharge transducers are different part numbers and can be distinguished by the color of the transducer body, suction (yellow) and discharge (red). No pressure transducer calibration is required. The transducers operate on a 5 vdc supply, which is generated by the main base board (MBB). See Fig. 38 for transducer connections to the J8 connector on the MBB.

TROUBLESHOOTING — If a transducer is suspected of being faulty, first check supply voltage to the transducer. Supply voltage should be 5 vdc ± 0.2 v. If supply voltage is correct, compare pressure reading displayed on the scrolling marquee display module against pressure shown on a calibrated pressure gauge. Pressure readings should be within ± 15 psig. If the two readings are not reasonably close, replace the pressure transducer.

Chilled Water Flow Switch — A factory-installed flow switch is installed in the leaving fluid piping for all units without the factory-installed hydronic package. See Fig. 39 and 40. Units with the optional hydronic package have the flow switch installed in the entering fluid piping. This is a thermal-dispersion flow switch with no field adjustments. The switch is set for approximately 0.5 ft/sec of flow. The sensor tip houses two thermistors and a heater element. One thermistor is located in the sensor tip, closest to the flowing fluid. This thermistor is used to detect changes in the flow velocity of the liquid. The second thermistor is bonded to the cylindrical wall and is affected only by changes in the temperature of the liquid. The thermistors are positioned to be in close contact with the wall of the sensor probe and, at the same time, to be kept separated from each other within the confines of the probe.

In order to sense flow, it is necessary to heat one of the thermistors in the probe. When power is applied, the tip of the probe is heated. As the fluid starts to flow, heat will be carried away from the sensor tip. Cooling of the first thermistor is a function of how fast heat is conducted away by the flowing liquid.

The difference in temperature between the two thermistors provides a measurement of fluid velocity past the sensor probe. When fluid velocity is high, more heat will be carried away from the heated thermistor and the temperature differential will be small. As fluid velocity decreases, less heat will be taken from the heated thermistor and there will be an increase in temperature differential.

When unit flow rate is above the minimum flow rate, then the output is switched on, sending 24 vac to the MBB to prove flow has been established.

For recommended maintenance, check the sensor tip for build-up every 6 months. Clean the tip with a soft cloth. If necessary, build-up (e.g., lime) can be removed with a common vinegar cleansing agent.

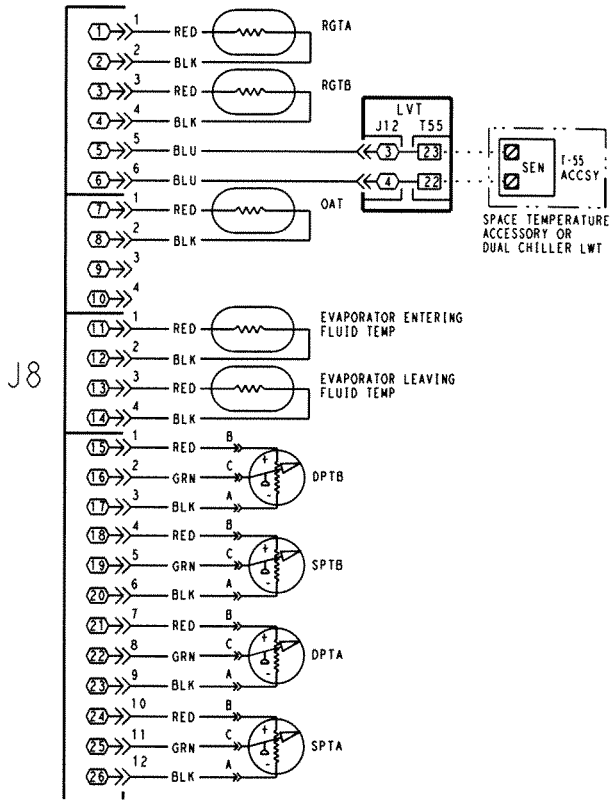

LEGEND

ACCSY	— Accessory
DPT	— Discharge Pressure Transducer
LWT	— Leaving Water Temperature Sensor
LVT	— Low Voltage Terminal
OAT	— Outdoor Air Temperature Sensor
RGT	— Return Gas Temperature Sensor
SEN	— Sensor Terminal Block
SPT	— Space Temperature Sensor

Fig. 38 — Thermistor Connections to Main Base Board, J8 Connector

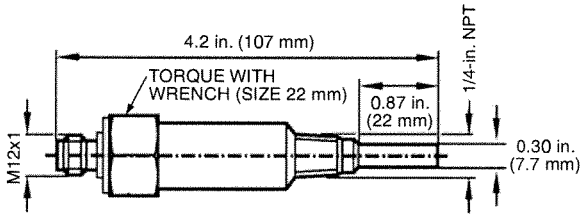

Fig. 39 — Chilled Water Flow Switch

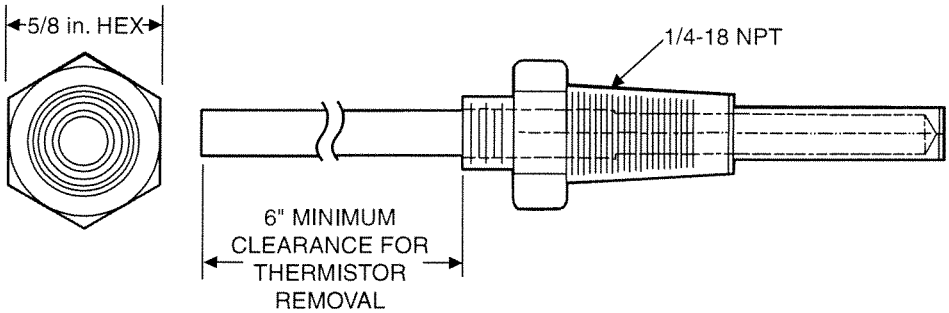

Fig. 37 — Thermistor Well

Table 25 — 5K Thermistor Temperatures (°F) vs. Resistance/Voltage Drop (Voltage Drop for EWT, LWT, RGT, and OAT)

TEMP (F)	VOLTAGE DROP (V)	RESISTANCE (Ohms)
-25	3.699	98,010
-24	3.689	94,707
-23	3.679	91,522
-22	3.668	88,449
-21	3.658	85,486
-20	3.647	82,627
-19	3.636	79,871
-18	3.624	77,212
-17	3.613	74,648
-16	3.601	72,175
-15	3.588	69,790
-14	3.576	67,490
-13	3.563	65,272
-12	3.550	63,133
-11	3.536	61,070
-10	3.523	59,081
-9	3.509	57,162
-8	3.494	55,311
-7	3.480	53,526
-6	3.465	51,804
-5	3.450	50,143
-4	3.434	48,541
-3	3.418	46,996
-2	3.402	45,505
-1	3.386	44,066
0	3.369	42,679
1	3.352	41,339
2	3.335	40,047
3	3.317	38,800
4	3.299	37,596
5	3.281	36,435
6	3.262	35,313
7	3.243	34,231
8	3.224	33,185
9	3.205	32,176
10	3.185	31,202
11	3.165	30,260
12	3.145	29,351
13	3.124	28,473
14	3.103	27,624
15	3.082	26,804
16	3.060	26,011
17	3.038	25,245
18	3.016	24,505
19	2.994	23,789
20	2.972	23,096
21	2.949	22,427
22	2.926	21,779
23	2.903	21,153
24	2.879	20,547
25	2.856	19,960
26	2.832	19,393
27	2.808	18,843
28	2.784	18,311
29	2.759	17,796
30	2.735	17,297
31	2.710	16,814
32	2.685	16,346
33	2.660	15,892
34	2.634	15,453
35	2.609	15,027
36	2.583	14,614
37	2.558	14,214
38	2.532	13,826
39	2.506	13,449
40	2.480	13,084
41	2.454	12,730
42	2.428	12,387
43	2.402	12,053
44	2.376	11,730
45	2.349	11,416
46	2.323	11,112
47	2.296	10,816
48	2.270	10,529
49	2.244	10,250
50	2.217	9,979
51	2.191	9,717
52	2.165	9,461
53	2.138	9,213
54	2.112	8,973
55	2.086	8,739
56	2.060	8,511
57	2.034	8,291
58	2.008	8,076
59	1.982	7,686
60	1.956	7,665
61	1.930	7,468
62	1.905	7,277
63	1.879	7,091
64	1.854	6,911
65	1.829	6,735
66	1.804	6,564
67	1.779	6,399
68	1.754	6,238
69	1.729	6,081
70	1.705	5,929
71	1.681	5,781
72	1.656	5,637
73	1.632	5,497
74	1.609	5,361
75	1.585	5,229
76	1.562	5,101
77	1.538	4,976
78	1.516	4,855
79	1.493	4,737
80	1.470	4,622
81	1.448	4,511
82	1.426	4,403
83	1.404	4,298
84	1.382	4,196
85	1.361	4,096
86	1.340	4,000
87	1.319	3,906
88	1.298	3,814
89	1.278	3,726
90	1.257	3,640
91	1.237	3,556
92	1.217	3,474
93	1.198	3,395
94	1.179	3,318
95	1.160	3,243
96	1.141	3,170
97	1.122	3,099
98	1.104	3,031
99	1.086	2,964
100	1.068	2,898
101	1.051	2,835
102	1.033	2,773
103	1.016	2,713
104	0.999	2,655
105	0.983	2,597
106	0.966	2,542
107	0.950	2,488
108	0.934	2,436
109	0.918	2,385
110	0.903	2,335
111	0.888	2,286
112	0.873	2,239
113	0.858	2,192
114	0.843	2,147
115	0.829	2,103
116	0.815	2,060
117	0.801	2,018
118	0.787	1,977
119	0.774	1,937
120	0.761	1,898
121	0.748	1,860
122	0.735	1,822
123	0.723	1,786
124	0.710	1,750
125	0.698	1,715
126	0.686	1,680
127	0.674	1,647
128	0.663	1,614
129	0.651	1,582
130	0.640	1,550
131	0.629	1,519
132	0.618	1,489
133	0.608	1,459
134	0.597	1,430
135	0.587	1,401
136	0.577	1,373
137	0.567	1,345
138	0.557	1,318
139	0.548	1,291
140	0.538	1,265
141	0.529	1,240
142	0.520	1,214
143	0.511	1,190
144	0.502	1,165
145	0.494	1,141
146	0.485	1,118
147	0.477	1,095
148	0.469	1,072
149	0.461	1,050
150	0.453	1,029
151	0.445	1,007
152	0.438	986
153	0.430	965
154	0.423	945
155	0.416	925
156	0.408	906
157	0.402	887
158	0.395	868
159	0.388	850
160	0.381	832
161	0.375	815
162	0.369	798
163	0.362	782
164	0.356	765
165	0.350	750
166	0.344	734
167	0.339	719
168	0.333	705
169	0.327	690
170	0.322	677
171	0.317	663
172	0.311	650
173	0.306	638
174	0.301	626
175	0.296	614
176	0.291	602
177	0.286	591
178	0.282	581
179	0.277	570
180	0.272	561
181	0.268	551
182	0.264	542
183	0.259	533
184	0.255	524
185	0.251	516
186	0.247	508
187	0.243	501
188	0.239	494
189	0.235	487
190	0.231	480
191	0.228	473
192	0.224	467
193	0.220	461
194	0.217	456
195	0.213	450
196	0.210	445
197	0.206	439
198	0.203	434
199	0.200	429
200	0.197	424
201	0.194	419
202	0.191	415
203	0.188	410
204	0.185	405
205	0.182	401
206	0.179	396
207	0.176	391
208	0.173	386
209	0.171	382
210	0.168	377
211	0.165	372
212	0.163	367
213	0.160	361
214	0.158	356
215	0.155	350
216	0.153	344
217	0.151	338
218	0.148	332
219	0.146	325
220	0.144	318
221	0.142	311
222	0.140	304
223	0.138	297
224	0.135	289
225	0.133	282

Table 26 — 5K Thermistor Temperatures (°C) vs. Resistance/Voltage Drop (Voltage Drop for EWT, LWT, RGT, and OAT)

TEMP (C)	VOLTAGE DROP (V)	RESISTANCE (Ohms)	TEMP (C)	VOLTAGE DROP (V)	RESISTANCE (Ohms)	TEMP (C)	VOLTAGE DROP (V)	RESISTANCE (Ohms)
–32	3.705	100,260	**15**	1.982	7,855	**62**	0.506	1,158
–31	3.687	94,165	**16**	1.935	7,499	**63**	0.490	1,118
–30	3.668	88,480	**17**	1.889	7,161	**64**	0.475	1,079
–29	3.649	83,170	**18**	1.844	6,840	**65**	0.461	1,041
–28	3.629	78,125	**19**	1.799	6,536	**66**	0.447	1,006
–27	3.608	73,580	**20**	1.754	6,246	**67**	0.433	971
–26	3.586	69,250	**21**	1.710	5,971	**68**	0.420	938
–25	3.563	65,205	**22**	1.666	5,710	**69**	0.407	906
–24	3.539	61,420	**23**	1.623	5,461	**70**	0.395	876
–23	3.514	57,875	**24**	1.580	5,225	**71**	0.383	836
–22	3.489	54,555	**25**	1.538	5,000	**72**	0.371	805
–21	3.462	51,450	**26**	1.497	4,786	**73**	0.360	775
–20	3.434	48,536	**27**	1.457	4,583	**74**	0.349	747
–19	3.406	45,807	**28**	1.417	4,389	**75**	0.339	719
–18	3.376	43,247	**29**	1.378	4,204	**76**	0.329	693
–17	3.345	40,845	**30**	1.340	4,028	**77**	0.319	669
–16	3.313	38,592	**31**	1.302	3,861	**78**	0.309	645
–15	3.281	38,476	**32**	1.265	3,701	**79**	0.300	623
–14	3.247	34,489	**33**	1.229	3,549	**80**	0.291	602
–13	3.212	32,621	**34**	1.194	3,404	**81**	0.283	583
–12	3.177	30,866	**35**	1.160	3,266	**82**	0.274	564
–11	3.140	29,216	**36**	1.126	3,134	**83**	0.266	547
–10	3.103	27,633	**37**	1.093	3,008	**84**	0.258	531
–9	3.065	26,202	**38**	1.061	2,888	**85**	0.251	516
–8	3.025	24,827	**39**	1.030	2,773	**86**	0.244	502
–7	2.985	23,532	**40**	0.999	2,663	**87**	0.237	489
–6	2.945	22,313	**41**	0.969	2,559	**88**	0.230	477
–5	2.903	21,163	**42**	0.940	2,459	**89**	0.223	466
–4	2.860	20,079	**43**	0.912	2,363	**90**	0.217	456
–3	2.817	19,058	**44**	0.885	2,272	**91**	0.211	446
–2	2.774	18,094	**45**	0.858	2,184	**92**	0.204	436
–1	2.730	17,184	**46**	0.832	2,101	**93**	0.199	427
0	2.685	16,325	**47**	0.807	2,021	**94**	0.193	419
1	2.639	15,515	**48**	0.782	1,944	**95**	0.188	410
2	2.593	14,749	**49**	0.758	1,871	**96**	0.182	402
3	2.547	14,026	**50**	0.735	1,801	**97**	0.177	393
4	2.500	13,342	**51**	0.713	1,734	**98**	0.172	385
5	2.454	12,696	**52**	0.691	1,670	**99**	0.168	376
6	2.407	12,085	**53**	0.669	1,609	**100**	0.163	367
7	2.360	11,506	**54**	0.649	1,550	**101**	0.158	357
8	2.312	10,959	**55**	0.629	1,493	**102**	0.154	346
9	2.265	10,441	**56**	0.610	1,439	**103**	0.150	335
10	2.217	9,949	**57**	0.591	1,387	**104**	0.146	324
11	2.170	9,485	**58**	0.573	1,337	**105**	0.142	312
12	2.123	9,044	**59**	0.555	1,290	**106**	0.138	299
13	2.076	8,627	**60**	0.538	1,244	**107**	0.134	285
14	2.029	8,231	**61**	0.522	1,200			

Table 27 — 10K Thermistor Temperature (°F) vs. Resistance/Voltage Drop (For SPT)

TEMP (F)	VOLTAGE DROP (V)	RESISTANCE (Ohms)
–25	4.758	196,453
–24	4.750	189,692
–23	4.741	183,300
–22	4.733	177,000
–21	4.724	171,079
–20	4.715	165,238
–19	4.705	159,717
–18	4.696	154,344
–17	4.686	149,194
–16	4.676	144,250
–15	4.665	139,443
–14	4.655	134,891
–13	4.644	130,402
–12	4.633	126,183
–11	4.621	122,018
–10	4.609	118,076
–9	4.597	114,236
–8	4.585	110,549
–7	4.572	107,006
–6	4.560	103,558
–5	4.546	100,287
–4	4.533	97,060
–3	4.519	94,020
–2	4.505	91,019
–1	4.490	88,171
0	4.476	85,396
1	4.461	82,729
2	4.445	80,162
3	4.429	77,662
4	4.413	75,286
5	4.397	72,940
6	4.380	70,727
7	4.363	68,542
8	4.346	66,465
9	4.328	64,439
10	4.310	62,491
11	4.292	60,612
12	4.273	58,781
13	4.254	57,039
14	4.235	55,319
15	4.215	53,693
16	4.195	52,086
17	4.174	50,557
18	4.153	49,065
19	4.132	47,627
20	4.111	46,240
21	4.089	44,888
22	4.067	43,598
23	4.044	42,324
24	4.021	41,118
25	3.998	39,926
26	3.975	38,790
27	3.951	37,681
28	3.927	36,610
29	3.903	35,577
30	3.878	34,569
31	3.853	33,606
32	3.828	32,654
33	3.802	31,752
34	3.776	30,860
35	3.750	30,009
36	3.723	29,177
37	3.697	28,373
38	3.670	27,597
39	3.654	26,838
40	3.615	26,113
41	3.587	25,396
42	3.559	24,715
43	3.531	24,042
44	3.503	23,399
45	3.474	22,770
46	3.445	22,161
47	3.416	21,573
48	3.387	20,998
49	3.357	20,447
50	3.328	19,903
51	3.298	19,386
52	3.268	18,874
53	3.238	18,384
54	3.208	17,904
55	3.178	17,441
56	3.147	16,991
57	3.117	16,552
58	3.086	16,131
59	3.056	15,714
60	3.025	15,317
61	2.994	14,925
62	2.963	14,549
63	2.932	14,180
64	2.901	13,824
65	2.870	13,478
66	2.839	13,139
67	2.808	12,814
68	2.777	12,493
69	2.746	12,187
70	2.715	11,884
71	2.684	11,593
72	2.653	11,308
73	2.622	11,031
74	2.592	10,764
75	2.561	10,501
76	2.530	10,249
77	2.500	10,000
78	2.470	9,762
79	2.439	9,526
80	2.409	9,300
81	2.379	9,078
82	2.349	8,862
83	2.319	8,653
84	2.290	8,448
85	2.260	8,251
86	2.231	8,056
87	2.202	7,869
88	2.173	7,685
89	2.144	7,507
90	2.115	7,333
91	2.087	7,165
92	2.059	6,999
93	2.030	6,838
94	2.003	6,683
95	1.975	6,530
96	1.948	6,383
97	1.921	6,238
98	1.894	6,098
99	1.867	5,961
100	1.841	5,827
101	1.815	5,698
102	1.789	5,571
103	1.763	5,449
104	1.738	5,327
105	1.713	5,210
106	1.688	5,095
107	1.663	4,984
108	1.639	4,876
109	1.615	4,769
110	1.591	4,666
111	1.567	4,564
112	1.544	4,467
113	1.521	4,370
114	1.498	4,277
115	1.475	4,185
116	1.453	4,096
117	1.431	4,008
118	1.409	3,923
119	1.387	3,840
120	1.366	3,759
121	1.345	3,681
122	1.324	3,603
123	1.304	3,529
124	1.284	3,455
125	1.264	3,383
126	1.244	3,313
127	1.225	3,244
128	1.206	3,178
129	1.187	3,112
130	1.168	3,049
131	1.150	2,986
132	1.132	2,926
133	1.114	2,866
134	1.096	2,809
135	1.079	2,752
136	1.062	2,697
137	1.045	2,643
138	1.028	2,590
139	1.012	2,539
140	0.996	2,488
141	0.980	2,439
142	0.965	2,391
143	0.949	2,343
144	0.934	2,297
145	0.919	2,253
146	0.905	2,209
147	0.890	2,166
148	0.876	2,124
149	0.862	2,083
150	0.848	2,043
151	0.835	2,003
152	0.821	1,966
153	0.808	1,928
154	0.795	1,891
155	0.782	1,855
156	0.770	1,820
157	0.758	1,786
158	0.745	1,752
159	0.733	1,719
160	0.722	1,687
161	0.710	1,656
162	0.699	1,625
163	0.687	1,594
164	0.676	1,565
165	0.666	1,536
166	0.655	1,508
167	0.645	1,480
168	0.634	1,453
169	0.624	1,426
170	0.614	1,400
171	0.604	1,375
172	0.595	1,350
173	0.585	1,326
174	0.576	1,302
175	0.567	1,278
176	0.558	1,255
177	0.549	1,233
178	0.540	1,211
179	0.532	1,190
180	0.523	1,169
181	0.515	1,148
182	0.507	1,128
183	0.499	1,108
184	0.491	1,089
185	0.483	1,070
186	0.476	1,052
187	0.468	1,033
188	0.461	1,016
189	0.454	998
190	0.447	981
191	0.440	964
192	0.433	947
193	0.426	931
194	0.419	915
195	0.413	900
196	0.407	885
197	0.400	870
198	0.394	855
199	0.388	841
200	0.382	827
201	0.376	814
202	0.370	800
203	0.365	787
204	0.359	774
205	0.354	762
206	0.349	749
207	0.343	737
208	0.338	725
209	0.333	714
210	0.328	702
211	0.323	691
212	0.318	680
213	0.314	670
214	0.309	659
215	0.305	649
216	0.300	639
217	0.296	629
218	0.292	620
219	0.288	610
220	0.284	601
221	0.279	592
222	0.275	583
223	0.272	574
224	0.268	566
225	0.264	557

Table 28 — 10K Thermistor Temperature (°C) vs. Resistance/Voltage Drop (For SPT)

TEMP (C)	VOLTAGE DROP (V)	RESISTANCE (Ohms)
−32	4.762	200,510
−31	4.748	188,340
−30	4.733	177,000
−29	4.716	166,342
−28	4.700	156,404
−27	4.682	147,134
−26	4.663	138,482
−25	4.644	130,402
−24	4.624	122,807
−23	4.602	115,710
−22	4.580	109,075
−21	4.557	102,868
−20	4.533	97,060
−19	4.508	91,588
−18	4.482	86,463
−17	4.455	81,662
−16	4.426	77,162
−15	4.397	72,940
−14	4.367	68,957
−13	4.335	65,219
−12	4.303	61,711
−11	4.269	58,415
−10	4.235	55,319
−9	4.199	52,392
−8	4.162	49,640
−7	4.124	47,052
−6	4.085	44,617
−5	4.044	42,324
−4	4.003	40,153
−3	3.961	38,109
−2	3.917	36,182
−1	3.873	34,367
0	3.828	32,654
1	3.781	31,030
2	3.734	29,498
3	3.686	28,052
4	3.637	26,686
5	3.587	25,396
6	3.537	24,171
7	3.485	23,013
8	3.433	21,918
9	3.381	20,883
10	3.328	19,903
11	3.274	18,972
12	3.220	18,090
13	3.165	17,255
14	3.111	16,464
15	3.056	15,714
16	3.000	15,000
17	2.944	14,323
18	2.889	13,681
19	2.833	13,071
20	2.777	12,493
21	2.721	11,942
22	2.666	11,418
23	2.610	10,921
24	2.555	10,449
25	2.500	10,000
26	2.445	9,571
27	2.391	9,164
28	2.337	8,776
29	2.284	8,407
30	2.231	8,056
31	2.178	7,720
32	2.127	7,401
33	2.075	7,096
34	2.025	6,806
35	1.975	6,530
36	1.926	6,266
37	1.878	6,014
38	1.830	5,774
39	1.784	5,546
40	1.738	5,327
41	1.692	5,117
42	1.648	4,918
43	1.605	4,727
44	1.562	4,544
45	1.521	4,370
46	1.480	4,203
47	1.439	4,042
48	1.400	3,889
49	1.362	3,743
50	1.324	3,603
51	1.288	3,469
52	1.252	3,340
53	1.217	3,217
54	1.183	3,099
55	1.150	2,986
56	1.117	2,878
57	1.086	2,774
58	1.055	2,675
59	1.025	2,579
60	0.996	2,488
61	0.968	2,400
62	0.940	2,315
63	0.913	2,235
64	0.887	2,157
65	0.862	2,083
66	0.837	2,011
67	0.813	1,943
68	0.790	1,876
69	0.767	1,813
70	0.745	1,752
71	0.724	1,693
72	0.703	1,637
73	0.683	1,582
74	0.663	1,530
75	0.645	1,480
76	0.626	1,431
77	0.608	1,385
78	0.591	1,340
79	0.574	1,297
80	0.558	1,255
81	0.542	1,215
82	0.527	1,177
83	0.512	1,140
84	0.497	1,104
85	0.483	1,070
86	0.470	1,037
87	0.457	1,005
88	0.444	974
89	0.431	944
90	0.419	915
91	0.408	889
92	0.396	861
93	0.386	836
94	0.375	811
95	0.365	787
96	0.355	764
97	0.345	742
98	0.336	721
99	0.327	700
100	0.318	680
101	0.310	661
102	0.302	643
103	0.294	626
104	0.287	609
105	0.279	592
106	0.272	576
107	0.265	561

Table 29 — 86K Thermistor vs Resistance (DTT)

TEMP (C)	TEMP (F)	RESISTANCE (Ohms)
-40	-40	2,889,600
-35	-31	2,087,220
-30	-22	1,522,200
-25	-13	1,121,440
-20	-4	834,720
-15	5	627,280
-10	14	475,740
-5	23	363,990
0	32	280,820
5	41	218,410
10	50	171,170
15	59	135,140
20	68	107,440
25	77	86,000
30	86	69,280
35	95	56,160
40	104	45,810
45	113	37,580
50	122	30,990
55	131	25,680
60	140	21,400
70	158	15,070
75	167	12,730
80	176	10,790
85	185	9,200
90	194	7,870
95	203	6,770
100	212	5,850
105	221	5,090
110	230	4,450
115	239	3,870
120	248	3,350
125	257	2,920
130	266	2,580
135	275	2,280
140	284	2,020
145	293	1,800
150	302	1,590
155	311	1,390
160	320	1,250
165	329	1,120
170	338	1,010
175	347	920
180	356	830

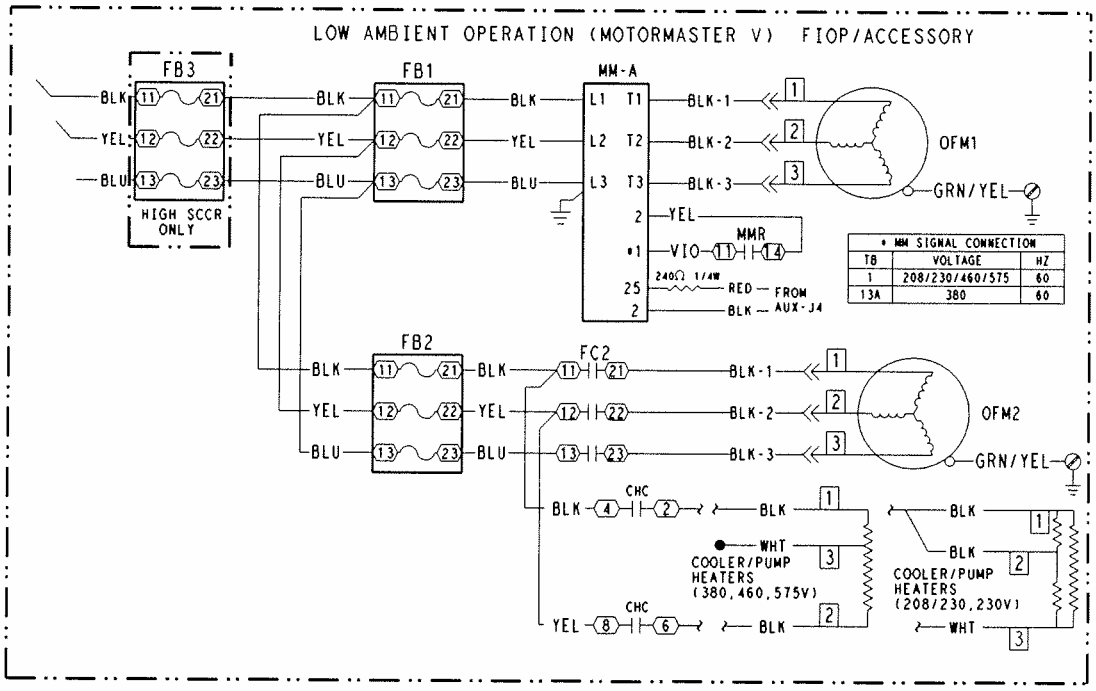

LEGEND

AUX — Auxiliary
FB — Fuse Block
MM — Motormaster
OFM — Outdoor Fan Motor
TB — Terminal Block

CONFIGURATION TABLE

MODE	NOMINAL VOLTAGE	Hz	CONTROL INPUT (PINS 25, 2)	START JUMPER
5	208/230/460/575*	60	External control 4-20 mA	TB1-TB2
6	208/380	60	External control 4-20 mA	TB13A-TB2

*208-v can run in mode 5 or 6.

Fig. 41 — Typical Motormaster Wiring

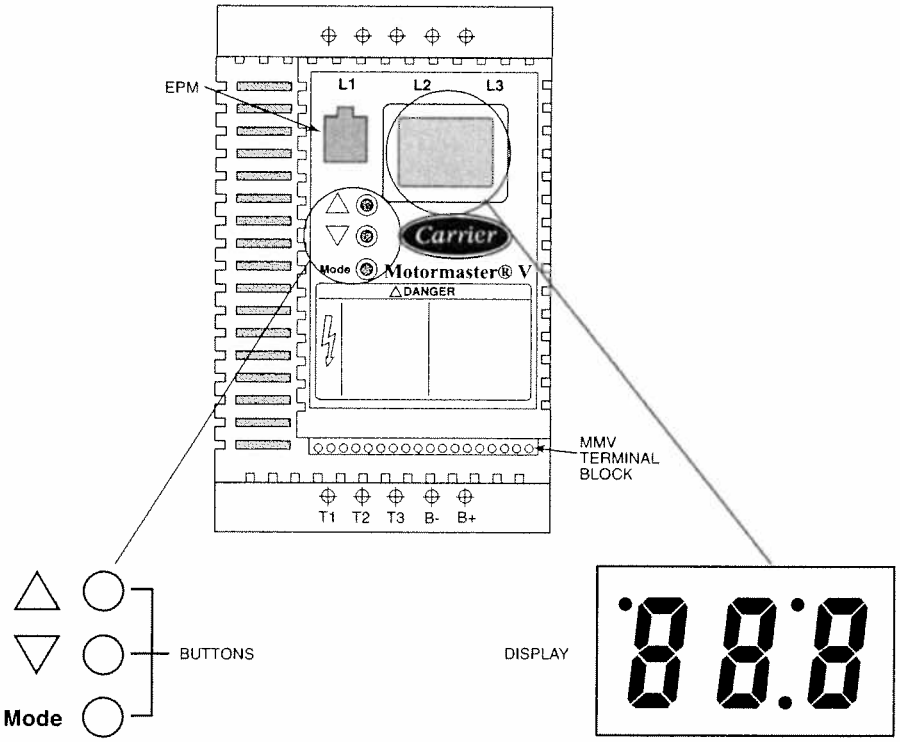

Fig. 42 — Motormaster® V Mode Buttons and Mode Display

Table 30 — Fault Codes

FAULT CODE	DESCRIPTION	SOLUTION
AF	High Temperature Fault: Ambient temperature is too high; Cooling fan has failed (if equipped).	Check cooling fan operation
CF	Control Fault: A blank EPM, or an EPM with corrupted data has been installed.	Perform a factory reset using Parameter 48 — PROGRAM SELECTION.
cF	Incompatibility Fault: An EPM with an incompatible parameter version has been installed.	Either remove the EPM or perform a factory reset (Parameter 48) to change the parameter version of the EPM to match the parameter version of the drive.
CL	CURRENT LIMIT: The output current has exceeded the CURRENT LIMIT setting (Parameter 25) and the drive is reducing the output frequency to reduce the output current. If the drive remains in CURRENT LIMIT too long, it can trip into a CURRENT OVERLOAD fault (PF).	Check for loose electrical connections. Check for faulty condenser fan motor. Check Parameter P25 from Table 31 is set correctly.
GF	Data Fault: User data and OEM defaults in the EPM are corrupted.	Restore factory defaults P48, see section above. If that does not work, replace EPM.
HF	High DC Bus Voltage Fault: Line voltage is too high; Deceleration rate is too fast; Overhauling load.	Check line voltage — set P01 appropriately
JF	Serial Fault: The watchdog timer has timed out, indicating that the serial link has been lost.	Check serial connection (computer) Check settings for P15. Check settings in communication software to match P15.
LF	Low DC Bus Voltage Fault: Line voltage is too low.	Check line voltage — set P01 appropriately
OF	Output Transistor Fault: Phase to phase or phase to ground short circuit on the output; Failed output transistor; Boost settings are too high; Acceleration rate is too fast.	Reduce boost or increase acceleration values. If unsuccessful, replace drive.
PF	Current Overload Fault: VFD is undersized for the application; Mechanical problem with the driven equipment.	Check line voltage — set P01 appropriately Check for dirty coils Check for motor bearing failure
SF	Single-phase Fault: Single-phase input power has been applied to a three-phase drive.	Check input power phasing
F1	EPM Fault: The EPM is missing or damaged.	
F2-F9, Fo	Internal Faults: The control board has sensed a problem	Consult factory
Drive display = 60.0 even though it is cold outside and it should be running slower	Feedback signal is above set point	Check for proper set point Check liquid line pressure
Drive display = '---' even though drive should be running	Start jumper is missing	Replace start jumper. See section above
Drive display = 8.0 even though fan should be running faster	Feedback signal is below set point and fan is at minimum speed	Check for proper set point Check liquid line pressure
VFD flashes 57 and LCS	Feedback or speed signal lost. Drive will operate at 57 Hz until reset or loss of start command. Resetting requires cycling start command (or power).	In stand alone mode: Check transducer wiring and feedback voltage. Feedback voltage displayed on P-69. Pin 6 should be 5 v output. Pin 5 (feedback) should be somewhere between 0 and 5 v.

LEGEND

EPM — Electronic Programming Module
LCS — Lost Control Signal
OEM — Outside Equipment Manufacturer
VFD — Variable Frequency Drive

Table 31 — Motormaster® V Program Parameters for Operating Modes

PARAMETERS	DESCRIPTION	MODE 5	MODE 6	MODE 7	MODE 8
P01	Line Voltage: 01 = low line, 02 = high line	01	02	01	02
P02	Carrier Freq: 01 = 4 kHz, 02 = 6 kHz, 03 = 8 kHz	01	01	01	01
P03	Startup mode: flying restart	06	06	06	06
P04	Stop mode: coast to stop	01	01	01	01
P05	Standard Speed source: 01= keypad, 04=4-20mA (NO PI), 05= R22, 06=R134a	04	04	04	04
P06	TB-14 output: 01 = none	01	01	01	01
P08	TB-30 output: 01 = none	01	01	01	01
P09	TB-31 Output: 01 = none	01	01	01	01
P10	TB-13A function sel: 01 = none	01	01	01	01
P11	TB-13B function sel: 01 = none	01	01	01	01
P12	TB-13C function sel: 01 = none	01	01	01	01
P13	TB-15 output: 01 = none	01	01	01	01
P14	Control: 01 = Terminal strip	01	01	01	01
P15	Serial link: 02 = enabled 9600,8,N,2 with timer	02	02	02	02
P16	Units editing: 02 = whole units	02	02	02	02
P17	Rotation: 01 = forward only, 03 = reverse only	01	01	01	01
P19	Acceleration time: 10 sec	10	10	10	10
P20	Deceleration time: 10 sec	10	10	10	10
P21	DC brake time: 0	0	0	0	0
P22	DC BRAKE VOLTAGE 0%	0	0	0	0
P23	Min freq = 8 Hz ~ 100 – 160 rpm	8	8	8	8
P24	Max freq	60	60	50	50
P25	Current limit: (%)	125	110	125	110
P26	Motor overload: 100	100	100	100	100
P27	Base freq: 60 or 50 Hz	60	60	50	50
P28	Fixed boost: 0.5% at low frequencies	0.5	0.5	0.5	0.5
P29	Accel boost: 0%	0	0	0	0
P30	Slip compensation: 0%	0	0	0	0
P31	Preset spd #1: speed if loss of control signal	57	57	47	47
P32	Preset spd #2: 0	0	0	0	0
P33	Preset spd #3: 0	0	0	0	0
P34	Preset spd 4 default — R22 set point. TB12-2 open	18.0	18.0	18.0	18.0
P35	Preset spd 5 default — R134a set point. TB12-2 closed	12.6	12.6	12.6	12.6
P36	Preset spd 6 default	0	0	0	0
P37	Preset spd 7 default	0	0	0	0
P38	Skip bandwidth	0	0	0	0
P39	Speed scaling	0	0	0	0
P40	Frequency scaling 50 or 60 Hz	60	60	50	50
P41	Load scaling: default (not used so NA)	200	200	200	200
P42	Accel/decel #2: default (not used so NA)	60	60	60	60
P43	Serial address	1	1	1	1
P44	Password:111	111	111	111	111
P45	Speed at min signal: 8 Hz; used when PID mode is disabled and 4-20mA input is at 4 mA	8	8	8	8
P46	Speed at max feedback: 60 or 50 Hz. Used when PID disabled and 4-20mA input is at 20 mA	60	60	50	50
P47	Clear history? 01 = maintain. (set to 02 to clear)	01	01	01	01
P48	Program selection: Program 1 – 12	05	06	07	08
P61	PI Mode: 05= reverse, 0-5V, 01 = no PID	01	01	01	01
P62	Min feedback = 0 (0V *10)	0	0	0	0
P63	Max feedback = 50 (5V * 10)	50	50	50	50
P64	Proportional gain = 4%	4	4	4	4
P65	Integral gain = .2	.2	.2	.2	.2
P66	PI acell/decel (set point change filter) = 5	5	5	5	5
P67	Min alarm	0	0	0	0
P68	Max alarm	0	0	0	0
P69	0 - 10 VDC Feedback	NA	NA	NA	NA

LEGEND

NA — Not Applicable
PID — Proportional Integral Derivative
TB — Terminal Block

Table 34 — Alarm and Alert Codes

ALARM/ ALERT CODE	ALARM OR ALERT	DESCRIPTION	WHY WAS THIS ALARM GENERATED?	ACTION TAKEN BY CONTROL	RESET METHOD	PROBABLE CAUSE
T051	Alert	Circuit A, Compressor 1 Failure	Compressor feedback signal does not match relay state	Compressor A1 shut down.	Manual	High-pressure switch open, faulty CSB, loss of condenser air, filter drier plugged, non-condensables, operation beyond capability.
A051	Alarm	Circuit A, Compressor 1 Stuck On Failure	CSB reads ON while the compressor relay has been commanded OFF	Compressor A1 shut down	Manual	Welded compressor contactor, welded relay output on MBB or CXB, failed CSB or wiring error.
	Alarm	Circuit A, Compressor 1 Chattering Contactor	CSB reads current/no current/ current/no current cycling in any 16 second window.	Compressor A1 shut down	Manual	Refrigerant charge, wiring error, plugged condenser coil, condenser fan motor failure.
T052	Alert	Circuit A, Compressor 2 Failure	Compressor feedback signal does not match relay state	Compressor A2 shut down.	Manual	High-pressure switch open, faulty CSB, loss of condenser air, filter drier plugged, non-condensables, operation beyond capability.
A052	Alarm	Circuit A, Compressor 2 Stuck On Failure	CSB reads ON while the compressor relay has been commanded OFF	Compressor A2 shut down	Manual	Welded compressor contactor, welded relay output on MBB or CXB, failed CSB or wiring error.
	Alarm	Circuit A, Compressor 2 Chattering Contactor	CSB reads current/no current/ current/no current cycling in any 16 second window.	Compressor A2 shut down	Manual	Refrigerant charge, wiring error, plugged condenser coil, condenser fan motor failure.
T053	Alert	Circuit A, Compressor 3 Failure	Compressor feedback signal does not match relay state	Compressor A3 shut down.	Manual	High-pressure switch open, faulty CSB, loss of condenser air, filter drier plugged, non-condensables, operation beyond capability.
A053	Alarm	Circuit A, Compressor 3 Stuck On Failure	CSB reads ON while the compressor relay has been commanded OFF	Compressor A3 shut down	Manual	Welded compressor contactor, welded relay output on MBB or CXB, failed CSB or wiring error.
	Alarm	Circuit A, Compressor 3 Chattering Contactor	CSB reads current/no current/ current/no current cycling in any 16 second window.	Compressor A3 shut down	Manual	Refrigerant charge, wiring error, plugged condenser coil, condenser fan motor failure.
T055	Alert	Circuit B, Compressor 1 Failure	Compressor feedback signal does not match relay state	Compressor B1 shut down.	Manual	High-pressure switch open, faulty CSB, loss of condenser air, filter drier plugged, non-condensables, operation beyond capability.
A055	Alarm	Circuit B, Compressor 1 Stuck On Failure	CSB reads ON while the compressor relay has been commanded OFF	Compressor B1 shut down	Manual	Welded compressor contactor, welded relay output on MBB or CXB, failed CSB or wiring error.
	Alarm	Circuit B, Compressor 1 Chattering Contactor	CSB reads current/no current/ current/no current cycling in any 16 second window.	Compressor B1 shut down	Manual	Refrigerant charge, wiring error, plugged condenser coil, condenser fan motor failure.
T056	Alert	Circuit B, Compressor 2 Failure	Compressor feedback signal does not match relay state	Compressor B2 shut down.	Manual	High-pressure switch open, faulty CSB, loss of condenser air, filter drier plugged, non-condensables, operation beyond capability.
A056	Alarm	Circuit B, Compressor 2 Stuck On Failure	CSB reads ON while the compressor relay has been commanded OFF	Compressor B2 shut down	Manual	Welded compressor contactor, welded relay output on MBB or CXB, failed CSB or wiring error.
	Alarm	Circuit B, Compressor 2 Chattering Contactor	CSB reads current/no current/ current/no current cycling in any 16 second window.	Compressor B2 shut down	Manual	Refrigerant charge, wiring error, plugged condenser coil, condenser fan motor failure.
T057	Alert	Circuit B, Compressor 3 Failure	Compressor feedback signal does not match relay state	Compressor B3 shut down.	Manual	High-pressure switch open, faulty CSB, loss of condenser air, filter drier plugged, non-condensables, operation beyond capability.
A057	Alarm	Circuit B, Compressor 3 Stuck On Failure	CSB reads ON while the compressor relay has been commanded OFF	Compressor B3 shut down	Manual	Welded compressor contactor, welded relay output on MBB or CXB, failed CSB or wiring error.
	Alarm	Circuit B, Compressor 3 Chattering Contactor	CSB reads current/no current/ current/no current cycling in any 16 second window.	Compressor B3 shut down	Manual	Refrigerant charge, wiring error, plugged condenser coil, condenser fan motor failure.
A060	Alarm	Cooler Leaving Fluid Thermistor Failure	Thermistor outside range of –40 to 245 F (–40 to 118 C)	Chiller shut down immediately	Automatic	Thermistor failure, damaged cable/wire or wiring error.
A061	Alarm	Cooler Entering Fluid Thermistor Failure	Thermistor outside range of –40 to 245 F (–40 to 118 C)	Chiller shut down immediately	Automatic	Thermistor failure, damaged cable/wire or wiring error.
T068	Alert	Circuit A Return Gas Thermistor Failure	Return gas thermistor is outside range of –40 to 245 F (–40 to 118 C)	Circuit A shut down	Automatic	Thermistor failure, damaged cable/wire or wiring error.
T069	Alert	Circuit B Return Gas Thermistor Failure	Return gas thermistor is outside range of –40 to 245 F –40 to 118 C)	Circuit B shut down	Automatic	Thermistor failure, damaged cable/wire or wiring error.

See Legend on page 73.

Table 34 — Alarm and Alert Codes (cont)

ALARM/ ALERT CODE	ALARM OR ALERT	DESCRIPTION	WHY WAS THIS ALARM GENERATED?	ACTION TAKEN BY CONTROL	RESET METHOD	PROBABLE CAUSE
T073	Alert	Outside Air Thermistor Failure	Thermistor outside range of –40 to 245 F (–40 to 118 C)	Temperature reset disabled. Chiller runs under normal control/set points. When capacity reaches 0, cooler/pump heaters are energized.	Automatic	Thermistor failure, damaged cable/wire or wiring error.
T074	Alert	Space Temperature/Dual Chiller Thermistor Failure	Thermistor outside range of –40 to 245 F (–40 to 118 C)	Temperature reset disabled. Chiller runs under normal control/set points.	Automatic	Thermistor failure, damaged cable/wire or wiring error.
T077	Alert	Circuit A Saturated Suction Temperature exceeds Cooler Leaving Fluid Temperature	Saturated suction temperature is greater than leaving fluid temperature for 5 minutes.	Circuit A shutdown	Automatic	Faulty expansion valve or suction pressure transducer or leaving fluid thermistor.
T078	Alert	Circuit B Saturated Suction Temperature exceeds Cooler Leaving Fluid Temperature	Saturated suction temperature is greater than leaving fluid temperature for 5 minutes.	Circuit B shutdown	Automatic	Faulty expansion valve or suction pressure transducer or leaving fluid thermistor.
T079	Alert	Lead/Lag LWT Thermistor Failure	Thermistor outside range of –40 to 245 F (–40 to 118 C)	Chiller runs as a stand alone machine	Automatic	Dual LWT thermistor failure, damaged cable/wire or wiring error.
T090	Alert	Circuit A Discharge Pressure Transducer Failure	Outside of range (0 to 667 psig)	Circuit A shut down	Automatic	Transducer failure, poor connection to MBB, or wiring damage/error.
T091	Alert	Circuit B Discharge Pressure Transducer Failure	Outside of range (0 to 667 psig)	Circuit B shut down	Automatic	Transducer failure, poor connection to MBB, or wiring damage/error.
T092	Alert	Circuit A Suction Pressure Transducer Failure	Outside of range (0 to 420 psig)	Circuit A shut down	Automatic	Transducer failure, poor connection to MBB, or wiring damage/error.
T093	Alert	Circuit B Suction Pressure Transducer Failure	Outside of range (0 to 420 psig)	Circuit B shut down	Automatic	Transducer failure, poor connection to MBB, or wiring damage/error.
T094	Alert	Discharge Gas Thermistor Failure	Discharge thermistor (DTT) is either open or shorted	Digital compressor shut down.	Automatic	Thermistor failure, damaged cable/wire or wiring error.
T110	Alert	Circuit A Loss of Charge	If the compressors are off and discharge pressure reading is < 26 psig for 30 sec.	Circuit not allowed to start.	Manual	Refrigerant leak or transducer failure
T111	Alert	Circuit B Loss of Charge	If the compressors are off and discharge pressure reading is < 26 psig for 30 sec.	Circuit not allowed to start.	Manual	Refrigerant leak or transducer failure
T112	Alert	Circuit A High Saturated Suction Temperature	Circuit saturated suction temperature pressure transducer > 70 F (21.1 C) for 5 minutes	Circuit shut down	Manual	Faulty Expansion valve, faulty suction pressure transducer or high entering fluid temperature.
T113	Alert	Circuit B High Saturated Suction Temperature	Circuit saturated suction temperature pressure transducer > 70 F (21.1 C) for 5 minutes	Circuit shut down	Manual	Faulty Expansion valve, faulty suction pressure transducer or high entering fluid temperature.
T114	Alert	Circuit A Low Suction Superheat	Suction superheat is less than 5° F (2.8 C) for 5 minutes.	Circuit A shut down.	Automatic restart after first daily occurrence. Manual restart thereafter.	Faulty expansion valve, faulty suction pressure transducer, faulty suction gas thermistor, circuit overcharged
T115	Alert	Circuit B Low Suction Superheat	Suction superheat is less than 5° F (2.8 C) for 5 minutes.	Circuit B shut down.	Automatic restart after first daily occurrence. Manual restart thereafter.	Faulty expansion valve, faulty suction pressure transducer, faulty suction gas thermistor, circuit overcharged
T116	Alert	Circuit A Low Cooler Suction Temperature	Mode 7 caused the compressor to unload 6 consecutive times with less than a 30-minute interval between each circuit shutdown.	Circuit shut down	Manual	Faulty expansion valve, low refrigerant charge, plugged filter drier, faulty suction pressure transducer, low cooler fluid flow, improper brine freeze set point
T117	Alert	Circuit B Low Cooler Suction Temperature	Mode 8 caused the compressor to unload 6 consecutive times with less than a 30-minute interval between each circuit shutdown.	Circuit shut down	Manual	Faulty expansion valve, low refrigerant charge, plugged filter drier, faulty suction pressure transducer, low cooler fluid flow, improper brine freeze set point
P118	Pre-Alert	High Discharge Gas Temperature	Discharge Thermistor (DTT) reading is greater than 250 F	Compressor A1 shut down	Automatic	Refrigerant charge, plugged filter drier, head pressure control.
T118/ A118	Alert	High Discharge Gas Temperature	3 Discharge Gas Temperature alerts occur within a day	Compressor A1 shut down	Manual	Refrigerant charge, plugged filter drier, head pressure control.
T126	Alert	Circuit A High Head Pressure	Compressor operation outside of operating envelope.	Circuit shut down	Automatic, only after first 3 daily occurrences. Manual reset thereafter. Reading from OAT sensor must drop 5 F (2.8 C) before restart	Faulty transducer, low/ restricted condenser airflow, low refrigerant charge, faulty EXV.

Table 34 — Alarm and Alert Codes (cont)

ALARM/ ALERT CODE	ALARM OR ALERT	DESCRIPTION	WHY WAS THIS ALARM GENERATED?	ACTION TAKEN BY CONTROL	RESET METHOD	PROBABLE CAUSE
T127	Alert	Circuit B High Head Pressure	Compressor operation outside of operating envelope.	Circuit shut down	Automatic, only after first 3 daily occurrences. Manual reset thereafter. Reading from OAT sensor must drop 5 F (2.8 C) before restart	Faulty transducer/ restricted condenser airflow, low refrigerant charge, faulty EXV.
T133	Alert	Circuit A Low Suction Pressure	Suction pressure below 34 psig for 8 seconds or below 23 psig	Circuit shut down	Automatic restart after first daily occurrence. Manual restart thereafter.	Faulty or sticking EXV, low refrigerant charge, plugged filter drier.
T134	Alert	Circuit B Low Suction Pressure	Suction pressure below 34 psig for 8 seconds or below 23 psig	Circuit shut down	Automatic restart after first daily occurrence. Manual restart thereafter.	Faulty or sticking EXV, low refrigerant charge, plugged filter drier.
A140	Alarm	Reverse Rotation Detected	Suction pressure failed to drop when compressor is energized	Chiller not allowed to start.	Manual	Verify correct compressor rotation. Check for correct fan rotation first.
A150	Alarm	Unit is in Emergency Stop	CCN emergency stop command received	Chiller shutdown	Automatic once CCN command for EMSTOP returns to normal	CCN Network command.
A151	Alarm	Illegal Configuration	One or more illegal configurations exists.	Chiller is not allowed to start.	Manual once configuration errors are corrected	Configuration error. Check unit settings.
A152	Alarm	Unit Down Due to Failure	Both circuits are down due to alarms/alerts.	Chiller is unable to run.	Automatic once alarms/alerts are cleared that prevent the chiller from starting.	Alarm notifies user that chiller is 100% down.
T153	Alert	Real Time Clock Hardware Failure	Internal clock on MBB fails	Occupancy schedule will not be used. Chiller defaults to Local On mode.	Automatic when correct clock control restarts.	Time/Date/Month/ Day/Year not properly set.
A154	Alarm	Serial EEPROM Hardware Failure	Hardware failure with MBB	Chiller is unable to run.	Manual	Main Base Board failure.
T155	Alert	Serial EEPROM Storage Failure	Configuration/storage failure with MBB	No Action	Manual	Potential failure of MBB. Download current operating software. Replace MBB if error occurs again.
A156	Alarm	Critical Serial EEPROM Storage Failure	Configuration/storage failure with MBB	Chiller is not allowed to run.	Manual	Main Base Board failure.
A157	Alarm	A/D Hardware Failure	Hardware failure with peripheral device	Chiller is not allowed to run.	Manual	Main Base Board failure.
T170	Alert	Loss of communication with the Compressor Expansion Module	MBB cannot communicate with CXB	Compressor A1 shut down	Automatic	Wiring error, faulty wiring or failed CXB. Incorrect configuration.
A172	Alarm	Loss of Communication with EXV Board	MBB loses communication with EXV board	Chiller is not allowed to run.	Automatic	Wiring error, faulty wiring or failed EXV board.
T173	Alert	Loss of Communication with EMM	MBB loses communication with EMM	4 to 20 mA temperature reset disabled. Demand Limit set to 100%. 4 to 20 mA set point disabled.	Automatic	Wiring error, faulty wiring or failed Energy Management Module (EMM).
T174	Alert	4 to 20 mA Cooling Set Point Input Failure	If configured with EMM and input less than 2 mA or greater than 22 mA	Set point function disabled. Chiller controls to CSP1.	Automatic	Faulty signal generator, wiring error, or faulty EMM.
T175	Alert	Loss of Communication with the AUX Board	MBB loses communication with AUX Board.		Automatic	Wiring error, faulty wiring or failed AUX board.
T176	Alert	4 to 20 mA Temperature Reset Input Failure	If configured with EMM and input less than 2 mA or greater than 22 mA	Reset function disabled. Chiller returns to normal set point control.	Automatic	Faulty signal generator, wiring error, or faulty EMM.
T177	Alert	4 to 20 mA Demand Limit Input Failure	If configured with EMM and input less than 2 mA or greater than 22 mA	Demand limit function disabled. Chiller returns to 100% demand limit control.	Automatic	Faulty signal generator, wiring error, or faulty EMM.
A189	Alarm	Cooler Pump Auxiliary Contact Inputs Miswired	Pump 1 Auxiliary Contacts are closed when Pump 2 output is energized or if Pump 2 Auxiliary Contacts are closed when Pump 1 output is energized.	Both pump outputs are turned off.	Manual	Wiring error, faulty pump contactor auxiliary contacts.

See Legend on page 73.

Table 34 — Alarm and Alert Codes (cont)

ALARM/ ALERT CODE	ALARM OR ALERT	DESCRIPTION	WHY WAS THIS ALARM GENERATED?	ACTION TAKEN BY CONTROL	RESET METHOD	PROBABLE CAUSE
T190	Alert	Cooler Pump 1 Aux Contacts Failed to Close at Start-Up	Pump 1 Auxiliary Contacts did not close within 26 seconds after pump was started	Pump 1 turned off. Pump 2 will be started if available.	Manual	Wiring error, faulty contacts on pump contactor
T191	Alert	Cooler Pump 2 Aux Contacts Failed to Close at Start-Up	Pump 2 Auxiliary Contacts did not close within 26 seconds after pump was started	Pump 2 turned off. Pump 1 will be started if available.	Manual	Wiring error, faulty contacts on pump contactor
T192	Alert	Cooler Pump 1 Failed to Provide Flow at Start-Up	Pump 1 did not provide flow to close flow switch within 60 seconds	Pump 1 turned off. Pump 2 will be started if available.	Manual	Wiring error, pump circuit breaker tripped, contactor failure
T193	Alert	Cooler Pump 2 Failed to Provide Flow at Start-Up	Pump 2 did not provide flow to close flow switch within 60 seconds	Pump 1 turned off. Pump 2 will be started if available.	Manual	Wiring error, pump circuit breaker tripped, contactor failure
T194	Alert	Cooler Pump 1 Aux Contacts Opened During Normal Operation	Pump 1 Auxiliary Contacts open for 26 seconds after initially made. All compressors shut down. Pump 1 turned off.	Pump 2 will be started if available. Chiller allowed to run if Pump 2 successfully starts.	Manual	Wiring error, faulty contacts on pump contactor
T195	Alert	Cooler Pump 2 Aux Contacts Opened During Normal Operation	Pump 2 Auxiliary Contacts open for 26 seconds after initially made. All compressors shut down. Pump 2 turned off.	Pump 1 will be started if available. Chiller allowed to run if Pump 1 successfully starts.	Manual	Wiring error, faulty contacts on pump contactor
T196	Alert	Flow Lost While Pump 1 Running	Cooler flow switch contacts open for 3 seconds after initially made	All compressors shut down. Pump 1 turned off. Pump 2 will be started if available. Chiller allowed to run if Pump 2 successfully starts and flow switch is closed.	Manual	Wiring error, pump circuit breaker tripped, contactor failure
T197	Alert	Flow Lost While Pump 2 Running	Cooler flow switch contacts open for 3 seconds after initially made	All compressors shut down. Pump 2 turned off. Pump 1 will be started if available. Chiller allowed to run if Pump 1 successfully starts and flow switch is closed.	Manual	Wiring error, pump circuit breaker tripped, contactor failure
A198	Alarm	Cooler Pump 1 Aux Contacts Closed While Pump Off	Pump 1 Auxiliary Contacts closed for 26 seconds when pump state is off	Chiller not allowed to start	Automatic when aux contacts open	Wiring error, faulty pump contactor (welded contacts)
T199	Alert	Cooler Pump 2 Aux Contacts Closed While Pump Off	Pump 2 Auxiliary Contacts closed for 26 seconds when pump state is off	Chiller not allowed to start	Automatic when aux contacts open	Wiring error, faulty pump contactor (welded contacts)
P200 /A200	Pre-Alert/ Alarm	Cooler Flow/Interlock Contacts Failed to Close at Start-Up	Cooler flow switch contacts failed to close within 1 minute (if cooler pump control is enabled) or within 5 minutes (if cooler pump control is not enabled) after start-up	Chiller not allowed to start. For models with dual pumps, the second pump will be started if available	Manual	Wiring error, pump circuit breaker tripped, contactor failure, faulty flow switch or interlock
P201 /A201	Pre-Alert/ Alarm	Cooler Flow/Interlock Contacts Opened During Normal Operation	Flow switch opens for at least 3 seconds after being initially closed	All compressors shut down. For models with dual pumps, the second pump will be started if available	Automatic (P201) or Manual (A201)	Cooler pump failure, faulty flow switch or interlock, pump circuit breaker tripped
A202	Alarm	Cooler Pump Interlock Closed When Pump is Off	If configured for cooler pump control and flow switch input is closed for 5 minutes while pump output(s) are off	Chiller shut down	Automatic when aux contacts open	Wiring error, faulty pump contactor (welded contacts)
T203	Alert	Loss of Communication with Slave Chiller	Master chiller MBB loses communication with slave chiller MBB	Dual chiller control disabled. Chiller runs as a stand-alone machine.	Automatic	Wiring error, faulty wiring, failed Slave chiller MBB module, power loss at slave chiller, wrong slave address.
T204	Alert	Loss of Communication with Master Chiller	Slave chiller MBB loses communication with master chiller MBB	Dual chiller control disabled. Chiller runs as a stand-alone machine	Automatic	Wiring error, faulty wiring, failed master chiller MBB module, power loss at Master chiller.
T205	Alert	Master and Slave Chiller with Same Address	Master and slave chiller have the same CCN address (CCN.A)	Dual chiller routine disabled. Master/slave run as stand-alone chillers.	Automatic	CCN Address for both chillers is the same. Must be different. Check CCN.A under the OPT2 sub-mode in Configuration at both chillers.

Table 34 — Alarm and Alert Codes (cont)

ALARM/ ALERT CODE	ALARM OR ALERT	DESCRIPTION	WHY WAS THIS ALARM GENERATED?	ACTION TAKEN BY CONTROL	RESET METHOD	PROBABLE CAUSE
T206	Alert	High Leaving Chilled Water Temperature	LWT is greater than control point and LCW Alert Limit, and capacity is at 100% for one minute.	Alert only. No action taken.	Automatic	Building load greater than unit capacity, or compressor fault. Check for other alarms/alerts.
A207	Alarm	Cooler Freeze Protection	Cooler EWT or LWT is less than Brine Freeze (BR.FZ)	Chiller shutdown. Cooler pump continues to run a minimum of 5 minutes (if control enabled).	Both EWT and LWT must be at least 6 F (3.3 C) above Brine Freeze point (BR.FZ). Automatic for first, Manual reset thereafter.	Faulty thermistor, low water flow.
A208	Alarm	EWT or LWT Thermistor failure	Cooler EWT is less than LWT by 3° F (1.7° C) for 1 minute after a circuit is started	Chiller shutdown. Cooler pump shut off (if control enabled).	Manual	Faulty cooler pump, low water flow, plugged fluid strainer.
T300	Alert	Cooler Pump 1 Scheduled Maintenance Due	Pump 1 Service Countdown (P.1.DN) expired. Complete pump 1 maintenance and enter 'YES' for Pump 1 Maintenance Done (P.1.MN) item.	None	Automatic	Routine pump maintenance required
T301	Alert	Cooler Pump 2 Scheduled Maintenance Due	Pump 2 Service Countdown (P.2.DN) expired. Complete pump 2 maintenance and enter 'YES' for Pump 1 Maintenance Done (P.2.MN) item.	None	Automatic	Routine pump maintenance required
T302	Alert	Strainer Blowdown Scheduled Maintenance Due	Strainer Service Countdown (S.T.DN) expired. Complete strainer blowdown and enter 'YES' for Strainer Maintenance Done (S.T.MN) item.	None	Automatic	Routine strainer maintenance required
T303	Alert	Condenser Coil Maintenance Due	Coil Service Countdown (C.L.DN) expired. Complete condenser coil cleaning and enter 'YES' for Coil Maintenance Done (C.L.MN) item.	None	Automatic	Routine condenser coil maintenance required
T501	Alert	Current Sensor Board A1 Failure	Alert occurs when CSB output is a constant high value	Compressor A1 shut down	Automatic	CSB failure. Wiring error.
T502	Alert	Current Sensor Board A2 Failure	Alert occurs when CSB output is a constant high value	Compressor A2 shut down	Automatic	CSB failure. Wiring error.
T503	Alert	Current Sensor Board A3 Failure	Alert occurs when CSB output is a constant high value	Compressor A3 shut down	Automatic	CSB failure. Wiring error.
T505	Alert	Current Sensor Board B1 Failure	Alert occurs when CSB output is a constant high value	Compressor B1 shut down	Automatic	CSB failure. Wiring error.
T506	Alert	Current Sensor Board B2 Failure	Alert occurs when CSB output is a constant high value	Compressor B2 shut down	Automatic	CSB failure. Wiring error.
T507	Alert	Current Sensor Board B3 Failure	Alert occurs when CSB output is a constant high value	Compressor B3 shut down	Automatic	CSB failure. Wiring error.
T950	Alert	Loss of Communication with Water System Manager	No communications have been received by the MBB within 5 minutes of last transmission	WSM forces removed. Chiller runs under own control	Automatic	Failed module, wiring error, failed transformer, loose connection plug, wrong address
A951	Alert	Loss of Communication with Chillervisor System Manager	No communications have been received by the MBB within 5 minutes of last transmission	CSM forces removed. Chiller runs under own control	Automatic	Failed module, wiring error, failed transformer, loose connection plug, wrong address
T952	Alert	Loss of Communication with Hydronic System Manager	No communications have been received by the MBB within 5 minutes of last transmission	HSM forces removed. Chiller runs under own control	Automatic	Failed module, wiring error, failed transformer, loose connection plug, wrong address

LEGEND

CCN — Carrier Comfort Network
CSB — Current Sensor Board
CSM — Chillervisor System Manager
CXB — Current Sensor Board
EEPROM — Electronic Erasable Programmable Read Only Memory
EMM — Energy Management Module
EWT — Entering Fluid Temperature
EXV — Electronic Expansion Valve
HSM — Hydronic System Manager
LCW — Leaving Chilled Water
LWT — Leaving Fluid Temperature
MBB — Main Base Board
OAT — Outdoor-Air Temperature
SCT — Saturated Condensing Temperature
WSM — Water System Manager

COMPRESSOR FAILURE ALERTS

T051, T052, T053 (Circuit A Compressor Failures)

T055, T056, T057 (Circuit B Compressor Failures) — Alert codes T051-T053 are for compressors A1-A3, respectively, and T055-T057 are for compressors B1-B3, respectively. These alerts occur when the current sensor (CS) does not detect compressor current during compressor operation. When this occurs, the control turns off the compressor.

If the current sensor board reads OFF while the compressor relay has been commanded ON, an alert is generated.

POSSIBLE CAUSES

Compressor Overload — Either the compressor internal overload protector is open or the external overload protector (Kriwan module) has activated. The external overload protector modules are mounted in the compressor wiring junction box. Temperature sensors embedded in the compressor motor windings are the inputs to the module. The module is powered with 24 vac from the units main control box. The module output is a normally closed contact that is wired in series with the compressor contactor coil. In a compressor motor overload condition, contact opens, deenergizing the compressor contactor.

Low Refrigerant Charge — If the compressor operates for an extended period of time with low refrigerant charge, the compressor ASTP device will open, which will cause the compressor to trip on its overload protection device.

Circuit Breaker Trip — The compressors are protected from short circuit by a breaker in the control box.

Wiring Error — A wiring error might not allow the compressor to start.

To check out alerts T051-T057:

1. Turn on the compressor in question using Service Test mode. If the compressor does not start, then most likely the problem is one of the following: HPS open, open internal protection, circuit breaker trip, incorrect safety wiring, or incorrect compressor wiring.
2. If the compressor does start, verify it is rotating in the correct direction.

IMPORTANT: Prolonged operation in the wrong direction can damage the compressor. Correct rotation can be verified by a gage set and looking for a differential pressure rise on start-up.

IMPORTANT: If the CS is always detecting current, verify that the compressor is on. If the compressor is on, check the contactor and the relay on the MBB. If the compressor is off and there is no current, verify the CSB wiring and replace if necessary.

IMPORTANT: Return to Normal mode and observe compressor operation to verify that compressor current sensor is working and condenser fans are energized.

COMPRESSOR STUCK ON FAILURE ALARMS

Circuit A A051, A052, A053

Circuit B A055, A056, A057 — Alarm codes A051, A052, A053, A055, A056, and A057 are for compressors A1, A2, A3, B1, B2, and B3. These alarms occur when the CSB detects current when the compressor should be off. When this occurs, the control turns off the compressor.

If the current sensor board reads ON while the compressor relay has been commanded OFF for a period of 4 continuous seconds, an alarm is generated. These alarms are only monitored for a period of 10 seconds after the compressor relay has been commanded OFF. This is done to facilitate a service technician forcing a relay to test a compressor.

In addition, if a compressor stuck failure occurs and the current sensor board reports the compressor and the request off, certain diagnostics will take place as follows:

1. If any of the compressors are diagnosed as stuck on and the current sensor board is on and the request is off, the control will command the condenser fans to maintain normal head pressure.
2. The control will shut off all other compressors.

   The possible causes include welded contactor or frozen compressor relay on the MBB.

To check out alarms A051-A057:

1. Place the unit in Service Test mode. All compressors should be off.
2. Verify that there is not 24 v at the contactor coil. If there is 24 v at the contactor, check relay on MBB and wiring.
3. Check for welded contactor.
4. Verify CSB wiring.
5. Return to Normal mode and observe compressor operation to verify that compressor current sensor is working and condenser fans are energized.

A060 (Cooler Leaving Fluid Thermistor Failure) — The sensor reading is outside the range of –40 to 245 F (–40 to 118 C) then the alarm will occur. The cause of the alarm is usually a faulty thermistor, a shorted or open thermistor caused by a wiring error, or a loose connection. Failure of this thermistor will shut down the entire unit.

A061 (Cooler Entering Thermistor Failure) — If the sensor reading is outside the range of –40 to 240 F (–40 to116 C) then the alarm will occur. The cause of the alarm is usually a faulty thermistor, a shorted or open thermistor caused by a wiring error, or a loose connection. Failure of this thermistor will shut down the entire unit.

T068, T069 (Circuit A,B Compressor Return Gas Temperature Thermistor Failure) — This alert occurs when the compressor return gas temperature sensor is outside the range of –40 to 240 F (–40 to 116 C). Failure of this thermistor will shut down the appropriate circuit.

T073 (Outside Air Temperature Thermistor Failure) — This alert occurs when the outside air temperature sensor is outside the range of –40 to 240 F (–40 to 116 C). Failure of this thermistor will disable any elements of the control which requires its use.

T074 (Space Temperature Thermistor Failure) — This alert occurs when the space temperature sensor is outside the range of –40 to 245 F (–40 to 118 C). Failure of this thermistor will disable any elements of the control which requires its use. The cause of the alert is usually a faulty thermistor in the T55, or T58 device, a shorted or open thermistor caused by a wiring error, or a loose connection.

T077 (Circuit A Saturated Suction Temperature exceeds Cooler Leaving Fluid Temperature)

T078 (Circuit B Saturated Suction Temperature exceeds Cooler Leaving Fluid Temperature) — Alert codes T077 and T078 occur when a compressor in a circuit has been running and the saturated suction temperature is greater than the cooler leaving water temperature for 5 minutes. The alert is generated and the circuit is shut down. The alert automatically resets when the saturated suction temperature is less than the leaving water temperature minus 1° F (0.5° C).

T090 (Circuit A Discharge Pressure Transducer Failure)

T091 (Circuit B Discharge Pressure Transducer Failure) — Alert codes T090 and T091 are for circuits A and B, respectively. These alerts occur when the pressure is outside the range of 0.0 to 667.0 psig. A circuit cannot run when this alert is active. Use the scrolling marquee to reset the alert. The cause of

the alert is usually a faulty transducer, faulty 5-v power supply, or a loose connection.

T092 (Circuit A Suction Pressure Transducer Failure)

T093 (Circuit B Suction Pressure Transducer Failure) — Alert codes T092 and T093 are for circuits A and B, respectively. These alerts occur when the pressure is outside the range of 0.0 to 420.0 psig. A circuit cannot run when this alert is active. Use the scrolling marquee to reset the alert. The cause of the alert is usually a faulty transducer, faulty 5-v power supply, or a loose connection.

T094 (Discharge Gas Thermistor Failure) — This alert occurs for units which have the digital compressor installed on circuit A. If discharge gas temperature is open or shorted, the circuit will be shutoff. The alert will reset itself when discharge temperature is less than 250 F (121.1 C). The cause of the alert is usually low refrigerant charge or a faulty thermistor.

T110 (Circuit A Loss of Charge)

T111 (Circuit B Loss of Charge) — Alert codes T110 and T111 are for circuits A and B, respectively. These alerts occur when the compressor is OFF and the discharge pressure is less than 26 psig.

T112 (Circuit A High Saturated Suction Temperature)

T113 (Circuit B High Saturated Suction Temperature) — Alert codes T112 and T113 occur when compressors in a circuit have been running for at least 5 minutes and the circuit saturated suction temperature is greater than 70 F (21.1 C). The high saturated suction alert is generated and the circuit is shut down.

T114 (Circuit A Low Superheat)

T115 (Circuit B Low Superheat) — Alert codes T114 and T115 occur when the superheat of a circuit is less than 5 F (2.8 C) for 5 continuous minutes. The low superheat alert is generated and the circuit is shut down.

T116 (Circuit A Low Cooler Suction Temperature)

T117 (Circuit B Low Cooler Suction Temperature) — Alert codes T116 and T117 are for circuits A and B, respectively. These alerts are generated if the capacity stages are reduced three times without a 30 minute interval between capacity reductions due to operating mode 7 or mode 8.

T118 (High Discharge Gas Temperature Alert)

A118 (High Discharge Gas Temperature Alarm) — This alert or alarm occurs for units which have the digital compressor installed on circuit A. If discharge gas temperature is greater than 268 F (131.1 C), the circuit will be shut off. The alert will reset itself when discharge temperature is less than 250 F (121.1 C). If this alert occurs 3 times within a day, the A118 alarm will be generated and the alarm must be reset manually. The cause of the alert is usually low refrigerant charge or a faulty thermistor.

T126 (Circuit A High Head Pressure)

T127 (Circuit B High Head Pressure) — Alert codes T126 and T127 are for circuits A and B, respectively. These alerts occur when the appropriate saturated condensing temperature is greater than the operating envelope shown in Fig 20A or 20B. Prior to the alert, the control will shut down one compressor on a circuit if that circuit's saturated condensing temperature is greater than the maximum SCT minus 5° F (2.7° C). If SCT continues to rise to greater than the maximum SCT, the alert will occur and the circuit's remaining compressor will shut down. The cause of the alarm is usually an overcharged system, high outdoor ambient temperature coupled with dirty outdoor coil, plugged filter drier, or a faulty high-pressure switch.

T133 (Circuit A Low Suction Pressure)

T134 (Circuit B Low Suction Pressure) — Alert codes T133 and T134 are for circuits A and B, respectively. These alerts are generated if one of the two following conditions is satisfied: the circuit suction pressure is below 34 psig (234.4 kPa) for 8 seconds, or the suction pressure is below 23 psig (158.6 kPa). The cause of this alert may be low refrigerant charge, plugged liquid line filter drier, or sticking EXV. Check head pressure operation. If not equipped, consider adding low ambient temperature head pressure control.

Add wind baffles if required.

A140 (Reverse Rotation Detected) — A test is made once, when compressor is energized, for suction pressure change on the first activated circuit. The unit control determines failure as follows:

1. The suction pressure of both circuits is sampled 5 seconds before the compressor is brought on, right when the compressor is brought on and 5 seconds afterwards.
2. The rate of suction pressure change from 5 seconds before the compressor is brought on to when the compressor is brought on is calculated.
3. The rate of suction pressure change from when the compressor is brought on to 5 seconds afterwards is calculated.
4. With the above information, the test for reverse rotation is made. If the suction pressure change 5 seconds after compression is greater than the suction pressure change 5 seconds before compression – 1.25, then there is a reverse rotation error.

This alarm will disable mechanical cooling and will require manual reset.

A150 (Unit is in Emergency Stop) — If the CCN emergency stop command is received, the alarm is generated and the unit will be immediately stopped.

If the CCN point name "EMSTOP" in the system table is set to emergency stop, the unit will shut down immediately and broadcast an alarm back to the CCN, indicating that the unit is down. This alarm will clear when the variable is set back to "enable."

A151 (Illegal Configuration) — An A151 alarm indicates an invalid configuration has been entered. The following are illegal configurations.

- Invalid unit size has been entered.
- Fluid is water with ICE making configurated.
- Incorrect AUX board installed with Motormaster configured (AUX 1 must be used).
- Incorrect AUX software version (must be 3.0 or higher).

A152 (Unit Down Due to Failure) — Both circuits are off due to alerts and/or alarms. Reset is automatic when all alarms are cleared. This alarm indicates the unit is at 0% capacity.

T153 (Real Time Clock Hardware Failure) — A problem has been detected with MBB real time clock hardware. Try resetting the power and check the indicator lights. If the alarm continues, the board should be replaced.

A154 (Serial EEPROM Hardware Failure) — A problem has been detected with the EEPROM on the MBB. Try resetting the power and check the indicator lights. If the alarm continues, the board should be replaced.

T155 (Serial EEPROM Storage Failure Error) — A problem has been detected with the EEPROM storage on the MBB. Try resetting the power and check the indicator lights. If the alert continues, the board should be replaced.

A156 (Critical Serial EEPROM Storage Failure Error) — A problem has been detected with the EEPROM storage on the MBB. Try resetting the power and check the indicator lights. If the alarm continues, the board should be replaced.

A157 (A/D Hardware Failure) — A problem has been detected with A/D conversion on the boards. Try resetting the power and check the indicator lights. If the alarm continues, the board should be replaced.

T170 (Loss of Communication with the Compressor Expansion Module) —This alert indicates that there are communications problems with the compressor expansion module. All functions performed by the CXB will stop. The alarm will automatically reset.

A172 (Loss of Communication with the EXV Board) — This alarm indicates that there are communications problems with the EXV board. The alarm will automatically reset.

T173 (Energy Management Module Communication Failure) — This alert indicates that there are communications problems with the energy management. All functions performed by the EMM will stop, which can include demand limit, reset and capacity input. The alarm will automatically reset.

T174 (4 to 20 mA Cooling Set Point Input Failure) — This alert indicates a problem has been detected with cooling set point 4 to 20 mA input. The input value is either less than 2 mA or greater than 22 mA.

T175 (Loss of Communication with the AUX Board) — This alarm indicates that there are communications problems with the AUX board. All functions performed by the AUX board will stop, which can include digital scroll unloader operation and low ambient head pressure control. The alarm will automatically reset.

T176 (4 to 20 mA Reset Input Failure) — This alert indicates a problem has been detected with reset 4 to 20 mA input. The input value is either less than 2 mA or greater than 22 mA. The reset function will be disabled when this occurs.

T177 (4 to 20 mA Demand Limit Input Failure) — This alert indicates a problem has been detected with demand limit 4 to 20 mA input. The input value is either less than 2 mA or greater than 22 mA. The reset function will be disabled when this occurs.

P200 — Cooler Flow/Interlock Contacts Failed to Close at Start-Up Pre-Alert

A200 — Cooler Flow/Interlock Contacts Failed to Close at Start-Up Alarm — These alarms will occur if the cooler flow switch/cooler pump interlock contacts failed to close within 1 minute after start-up, if cooler pump control is enabled; or within 5 minutes after start-up, if cooler pump control is not enabled. If the unit is equipped with dual pumps, the second pump will be started and time allowed to prove flow before the unit is alarmed. When this alarm occurs, the chiller is not allowed to start. The alarm will require manual reset.

If this condition is encountered, check the following items:

- chilled water flow switch, for proper operation
- flow switch cable, for power and control
- check the chilled water loop to be sure that it is completely filled with water, and all air has been purged
- chilled water pump interlock circuit, for proper operation
- pump electrical circuit for power
- pump circuit breaker
- pump contactor, for proper operation
- hilled water pump, for proper operation; look for overload trips
- chilled water strainer for a restriction
- make sure that all isolation valves are open completely

P201 — Cooler Flow/Interlock Contacts Opened During Normal Operation Pre-Alert

A201 — Cooler Flow/Interlock Contacts Opened During Normal Operation Alarm — If the chilled water flow switch opens for at least three (3) seconds after initially being closed, a P201 — Cooler Flow/Interlock Contacts Opened During Normal Operation Pre-Alert will be generated for the appropriate pump and the machine will stop. If available, the other pump will be started. If flow is proven, the machine will be allowed to restart. If after 5 minutes, the cooler flow switch/interlock contacts do not close, the alarm will change to an A201 — Cooler Flow/Interlock Contacts Opened During Normal Operation Alarm.

When this alarm occurs, the chiller will be shut down. The pre-alert (P201) will be reset automatically; the alarm (A201) will require manual reset.

Possible Causes:

If this condition is encountered, check the following items:

- chilled water flow switch, for proper operation.
- flow switch cable, for power and control.
- check the chilled water loop to be sure that it is completely filled with water, and all air has been purged.
- check the chilled water pump interlock circuit for proper operation.

In units that do not control the chilled water pump, check the Cooler Pump Shutdown Delay (***Configuration→OPT1→PM.DY***). The factory default is set to one minute. If the unit is signaled to stop and the pumps are shutdown shortly after the command, this alarm may trigger. Try setting the delay to 0. Look at the system operation sequence to be sure that the unit has enough time to shut down, before the chilled water flow stops. Check the following items:

- pump electrical circuit for power.
- pump circuit breaker.
- pump contactor, for proper operation.
- chilled water pump for proper operation; look for overload trips.
- chilled water strainer for a restriction.
- make sure that all isolation valves are open completely.

T206 — High Leaving Chilled Water Temperature Alert — This alert will be generated if the unit is at 100% capacity for at least 60 seconds and the Leaving Water Temperature, **LWT** (***Run Status→VIEW***) is greater than the Control Point, **CTPT** (***Run Status→VIEW***) plus the High Leaving Chilled Water Alert Limit, **LCWT** (***Configuration→OPT2***).

LWT > CTPT + LCWT

LCWT is field selectable from 2 to 60 ΔF (1.1 to 33.3 ΔC) and is defaulted at 60 ΔF (33.3 ΔC).

The unit will not generate this alert if Capacity, **CAP** (***Run Status→VIEW***) is less than 100%. If the unit's available capacity is less than 100%, this alert will not be generated.

No action will be taken; this is an alert only.

This alert will reset automatically if one of two conditions is met:

1. If the Leaving Water Temperature, **LWT** (***Run Status→VIEW***) is less than the Control Point, **CTPT** (***Run Status→VIEW***) plus the High Leaving Chilled Water Alert Limit, **LCWT** (***Configuration→OPT2***) minus 5° F (2.8° C).

   LWT < CTPT + LCWT – 5° F (2.8° C)

2. If the Leaving Water Temperature, **LWT** (***Run Status→VIEW***) is less than the Control Point, **CTPT** (***Run Status→VIEW***).

   LWT < CTPT

If this condition is encountered, check to be sure building load does not exceed unit capacity.

T501, T502, T503 (Current Sensor Board Failure — A xx Circuit A)

T505, T506, T507 (Current Sensor Board Failure — B xx Circuit B) — Alert codes T501-T503 are for compressors A1-A3, respectively, and T505-T507 are for compressors B1-B3, respectively. These alerts occur when the output of the CSB is a constant high value. These alerts reset automatically. If the problem cannot be resolved, the CSB must be replaced.

APPENDIX A — DISPLAY TABLES

Run Status Mode and Sub-Mode Directory

SUB-MODE	ITEM	DISPLAY	ITEM DESCRIPTION	COMMENT
VIEW	AUTO VIEW OF RUN STATUS			
	EWT	xxx.x °F	Entering Fluid Temp	
	LWT	xxx.x °F	Leaving Fluid Temp	
	SETP	xxx.x °F	Active Set Point	
	CTPT	xxx.x °F	Control Point	
	LOD.F	xxx	Load/Unload Factor	
	STAT		Control Mode	0=Service Test 1=Off Local 2=Off CCN 3=Off Time 4=Off Emrgcy 5=On Local 6=On CCN 7=On Time 8=Ht Enabled 9=Pump Delay
	LD.PM		Lead Pump	
	OCC	YES/NO	Occupied	
	LS.AC	YES/NO	Low Sound Active	
	MODE	YES/NO	Override Modes in Effect	
	CAP	xxx	Percent Total Capacity	
	STGE	x	Requested Stage	
	ALRM	xxx	Current Alarms & Alerts	
	TIME	xx.xx	Time of Day	00:00-23:59
	MNTH	xx	Month of Year	1 - 12 (1 = January, 2 = February, etc.)
	DATE	xx	Day of Month	01-31
	YEAR	xx	Year of Century	
RUN	UNIT RUN HOUR AND START			
	HRS.U	xxxx HRS	Machine Operating Hours	
	STR.U	xxxx	Machine Starts	
	HR.P1	xxxx HRS	Pump 1 Run Hours	
	HR.P2	xxxx HRS	Pump 2 Run Hours	
HOUR	CIRC AND COMP RUN HOURS			
	HRS.A	xxxx HRS	Circuit A Run Hours	
	HRS.B	xxxx HRS	Circuit B Run Hours	See Note
	HR.A1	xxxx HRS	Compressor A1 Run Hours	
	HR.A2	xxxx HRS	Compressor A2 Run Hours	
	HR.A3	xxxx HRS	Compressor A3 Run Hours	
	HR.B1	xxxx HRS	Compressor B1 Run Hours	See Note
	HR.B2	xxxx HRS	Compressor B2 Run Hours	See Note
	HR.B3	xxxx HRS	Compressor B3 Run Hours	See Note
STRT	COMPRESSOR STARTS			
	ST.A1	xxxx	Compressor A1 Starts	
	ST.A2	xxxx	Compressor A2 Starts	
	ST.A3	xxxx	Compressor A3 Starts	
	ST.B1	xxxx	Compressor B1 Starts	See Note
	ST.B2	xxxx	Compressor B2 Starts	See Note
	ST.B3	xxxx	Compressor B3 Starts	See Note

NOTE: If the unit has a single circuit, the Circuit B items will not appear in the display.

APPENDIX A — DISPLAY TABLES (cont)

Run Status Mode and Sub-Mode Directory (cont)

SUB-MODE	ITEM	DISPLAY	ITEM DESCRIPTION	COMMENT
PM	PREVENTIVE MAINTENANCE			
	PUMP	PUMP MAINTENANCE		
	SI.PM	xxxx HRS	Pump Service Interval	Default: 8760
	P.1.DN	xxxx HRS	Pump 1 Service Countdown	
	P.2.DN	xxxx HRS	Pump 2 Service Countdown	
	P.1.MN	YES/NO	Pump 1 Maintenance Done	User Entry
	P.2.MN	YES/NO	Pump 2 Maintenance Done	User Entry
	PMDT	PUMP MAINTENANCE DATES		
	P.1.M0		MM/DD/YY HH:MM	
	P.1.M1		MM/DD/YY HH:MM	
	P.1.M2		MM/DD/YY HH:MM	
	P.1.M3		MM/DD/YY HH:MM	
	P.1.M4		MM/DD/YY HH:MM	
	P.2.M0		MM/DD/YY HH:MM	
	P.2.M1		MM/DD/YY HH:MM	
	P.2.M2		MM/DD/YY HH:MM	
	P.2.M3		MM/DD/YY HH:MM	
	P.2.M4		MM/DD/YY HH:MM	
	STRN	STRAINER MAINTENANCE		
	SI.ST	xxxx HRS	Strainer Srvc Interval	Default: 8760
	S.T.DN	xxxx HRS	Strainer Srvc Countdown	
	S.T.MN	YES/NO	Strainer Maint. Done	User Entry
	ST.DT	STRAINER MAINTENANCE DATES		
	S.T.M0		MM/DD/YY HH:MM	
	S.T.M1		MM/DD/YY HH:MM	
	S.T.M2		MM/DD/YY HH:MM	
	S.T.M3		MM/DD/YY HH:MM	
	S.T.M4		MM/DD/YY HH:MM	
	COIL	COIL MAINTENANCE		
	SI.CL	xxxx HRS	Coil Cleaning Srvc Int	Default: 8760
	C.L.DN	xxxx HRS	Coil Service Countdown	
	C.L.MN	YES/NO	Coil Cleaning Maint.Done	User Entry
	CL.DT	COIL MAINTENANCE DATES		
	C.L.M0		MM/DD/YY HH:MM	
	C.L.M1		MM/DD/YY HH:MM	
	C.L.M2		MM/DD/YY HH:MM	
	C.L.M3		MM/DD/YY HH:MM	
	C.L.M4		MM/DD/YY HH:MM	
VERS	SOFTWARE VERSION NUMBERS			
	MBB		CESR131460-XX-XX	xx-xx is version number
	EXV		CESR131172-XX-XX	xx-xx is version number
	AUX1		CESR131333-XX-XX	xx-xx is version number
	EMM		CESR131174-XX-XX	xx-xx is version number
	MARQ		CESR131171-XX-XX	xx-xx is version number
	NAVI		CESR130227-XX-XX	xx-xx is version number
	CXB		CESR131173-XX-XX	xx-xx is version number

APPENDIX A — DISPLAY TABLES (cont)

Service Test Mode and Sub-Mode Directory

SUB-MODE	ITEM	DISPLAY	ITEM DESCRIPTION	COMMENT*
TEST			Service Test Mode	To enable Service Test mode, move Enable/Off/Remote contact switch to OFF. Change TEST to ON. Move switch to ENABLE
OUTS	OUTPUTS			
	EXV.A	xxx%	EXV% Open	
	EXV.B	xxx%	EXV% Open	
	FAN1	ON/OFF	Fan 1 Relay	Size 010-030: Fan 1 Size 035-060: Fan 3 Size 070-150: Fan 5
	FAN2	ON/OFF	Fan 2 Relay	Size 018-030: Fan 2 Size 035-060: Fans 1, 2 Size 070-150: Fan 1
	FAN3	ON/OFF	Fan 3 Relay	Size 055, 060: Fan 4 Size 070: Fans 2, 6 Size 080,090: Fans 2, 4 ,6 Size 100-150: Fans 2, 4
	FAN4	ON/OFF	Fan 4 Relay	Size 070-150: Fan 3
	FAN5	ON/OFF	Fan 5 Relay	Size 100-150: Fan 7
	FAN6	ON/OFF	Fan 6 Relay	Size 100: Fan 8 Size 115: Fans 6,8 Size 130-150: Fans 8, 10
	FAN7	ON/OFF	Fan 7 Relay	Size130-150: Fan 9
	FAN8	ON/OFF	Fan 8 Relay	Size 150: Fan 6
	V.HPA	xx	Var Head Press% Circuit A	
	V.HPB	xx	Var Head Press% Circuit B	
	CLP.1	ON/OFF	Cooler Pump Relay 1	
	CLP.2	ON/OFF	Cooler Pump Relay 2	
	DIG.P	xxx	Compressor A1 Load Percent	Digital Scroll option only
	CL.HT	ON/OFF	Cooler/Pump Heater	
	CCH.A	ON/OFF	Crankcase Heater Circuit A	
	CCH.B	ON/OFF	Crankcase Heater Circuit B	
	RMT.A	ON/OFF	Remote Alarm Relay	
CMPA	CIRCUIT A COMPRESSOR TEST			
	CC.A1	ON/OFF	Compressor A1 Relay	
	DIG.P	xxx	Compressor A1 Load Percent	Digital Scroll option only
	CC.A2	ON/OFF	Compressor A2 Relay	
	CC.A3	ON/OFF	Compressor A3 Relay	
	MLV	ON/OFF	Minimum Load Valve Relay	
CMPB	CIRCUIT B COMPRESSOR TEST			
	CC.B1	ON/OFF	Compressor B1 Relay	See Note
	CC.B2	ON/OFF	Compressor B2 Relay	See Note
	CC.B3	ON/OFF	Compressor B3 Relay	See Note

Temperature Mode and Sub-Mode Directory

SUB-MODE	ITEM	DISPLAY	ITEM DESCRIPTION	COMMENT
UNIT	ENTERING AND LEAVING UNIT TEMPERATURES			
	CEWT	xxx.x °F	Cooler Entering Fluid	
	CLWT	xxx.x °F	Cooler Leaving Fluid	
	OAT	xxx.x °F	Outside Air Temperature	
	SPT	xxx.x °F	Space Temperature	
	DLWT	xxx.x °F	Lead/Lag Leaving Fluid	
CIR.A	TEMPERATURES CIRCUIT A			
	SCT.A	xxx.x °F	Saturated Condensing Tmp	
	SST.A	xxx.x °F	Saturated Suction Temp	
	RGT.A	xxx.x °F	Compr Return Gas Temp	
	D.GAS	xxx.x °F	Discharge Gas Temp	Digital Scroll option only
	SH.A	xxx.x ΔF	Suction Superheat Temp	
CIR.B	TEMPERATURES CIRCUIT B			
	SCT.B	xxx.x °F	Saturated Condensing Tmp	See Note
	SST.B	xxx.x °F	Saturated Suction Temp	See Note
	RGT.B	xxx.x °F	Compr Return Gas Temp	See Note
	SH.B	xxx.x ΔF	Suction Superheat Temp	See Note

*Refer to Fig. 21 on page 30 for condenser fan layout.
NOTE: If the unit has a single circuit, the Circuit B items will not appear in the display.

APPENDIX A — DISPLAY TABLES (cont)

Pressures Mode and Sub-Mode Directory

SUB-MODE	ITEM	DISPLAY	ITEM DESCRIPTION	COMMENT
PRC.A	PRESSURES CIRCUIT A			
	DP.A	xxx.x PSIG	Discharge Pressure	
	SP.A	xxx.x PSIG	Suction Pressure	
PRC.B	PRESSURES CIRCUIT B			
	DP.B	xxx.x PSIG	Discharge Pressure	See Note
	SP.B	xxx.x PSIG	Suction Pressure	See Note

Set Points Mode and Sub-Mode Directory

SUB-MODE	ITEM	DISPLAY	ITEM DESCRIPTION	RANGE	COMMENT
COOL	COOLING SET POINTS				
	CSP.1	xxx.x °F	Cooling Set Point 1	–20 to 70	Default: 44 F
	CSP.2	xxx.x °F	Cooling Set Point 2	–20 to 70	Default: 44 F
	CSP.3	xxx.x °F	ICE Set Point	–20 to 32	Default: 32 F
HEAD	HEAD PRESSURE SET POINTS				
	H.DP	xxx.x °F	Head Set Point	85 to 120	Default: 95 F
	F.ON	xxx.x °F	Fan On Set Point	Read Only	Default: 95 F
	F.OFF	xxx.x °F	Fan Off Set Point	Read Only	Default: 72 F
	B.OFF	xx.x	Base Fan Off Delta Temp	10 to 50	Default: 23 F
	F.DLT	xxx	Fan Stage Delta	0 to 50	Default: 15 F
FRZ	BRINE FREEZE SET POINT				
	BR.FZ	xx.x °F	Brine Freeze Point	–20 to 34	Default: 34 F

Inputs Mode and Sub-Mode Directory

SUB-MODE	ITEM	DISPLAY	ITEM DESCRIPTION	COMMENT
GEN.I	GENERAL INPUTS			
	STST	ON/OFF	Start/Stop Switch	
	FLOW	ON/OFF	Cooler Flow Switch	
	PM.F.1	ON/OFF	Cooler Pump 1 Interlock	
	PM.F.2	ON/OFF	Cooler Pump 2 Interlock	
	HT.RQ	ON/OFF	Heat Request	
	DLS1	ON/OFF	Demand Limit Switch 1	
	DLS2	ON/OFF	Demand Limit Switch 2	
	ICED	ON/OFF	Ice Done	
	DUAL	ON/OFF	Dual Set Point Switch	
CRCT	CIRCUIT INPUTS			
	FKA1	ON/OFF	Compressor A1 Feedback	
	FKA2	ON/OFF	Compressor A2 Feedback	
	FKA3	ON/OFF	Compressor A3 Feedback	
	FKB1	ON/OFF	Compressor B1 Feedback	See Note
	FKB2	ON/OFF	Compressor B2 Feedback	See Note
	FKB3	ON/OFF	Compressor B3 Feedback	See Note
4-20	4-20 MA INPUTS			
	DMND	xx.x	4-20 ma Demand Signal	
	RSET	xx.x	4-20 ma Reset Signal	
	CSP	xx.x	4-20 ma Cooling Set Point	

NOTE: If the unit has a single circuit, the Circuit B items will not appear in the display.

APPENDIX A — DISPLAY TABLES (cont)

Outputs Mode and Sub-Mode Directory

SUB-MODE	ITEM	DISPLAY	ITEM DESCRIPTION	COMMENT
	GENERAL OUTPUTS			
GEN.O	FAN1	ON/OFF	Fan 1 Relay	
	FAN2	ON/OFF	Fan 2 Relay	
	FAN3	ON/OFF	Fan 3 Relay	
	FAN4	ON/OFF	Fan 4 Relay	
	FAN5	ON/OFF	Fan 5 Relay	
	FAN6	ON/OFF	Fan 6 Relay	
	FAN7	ON/OFF	Fan 7 Relay	
	FAN8	ON/OFF	Fan 8 Relay	
	V.HPA	ON/OFF	Fan Speed Circuit A	
	V.HPB	ON/OFF	Fan Speed Circuit B	See Note
	C.WP1	ON/OFF	Cooler Pump Relay 1	
	C.WP2	ON/OFF	Cooler Pump Relay 2	
	CLHT	ON/OFF	Cooler/Pump Heater	
	MLV.R	ON/OFF	Minimum Load Valve Relay	
	OUTPUTS CIRCUIT A EXV			
A.EXV	EXV.A	ON/OFF	EXV% Open	
	APPR	ON/OFF	Circuit A Approach	
	AP.SP	ON/OFF	Approach Setpoint	
	X.SH.R		SH Reset at Max Unl-Dig	
	S.SH.R		Digload to Start SH RST	
	SH_R		Amount of SH Reset	
	OVR.A	ON/OFF	EXVA Override	
	SPH.A	ON/OFF	Suction Superheat Temp	
	ASH.S	ON/OFF	Active Superheat Setpt	
	AMP.S	ON/OFF	Active Mop Setpt	
	PLM.A	ON/OFF	Cir A EXV Position Limit	
	SPR.1	ON/OFF	Spare 1 Temperature	
	OUTPUTS CIRCUIT A EXV			
B.EXV	EXV.B	ON/OFF	EXV% Open	
	APPR	ON/OFF	Circuit B Approach	
	AP.SP	ON/OFF	Approach Setpoint	
	OVR.B	ON/OFF	EXVB Override	
	SPH.B	ON/OFF	Suction Superheat Temp	
	ASH.S	ON/OFF	Active Superheat Setpt	
	AMP.S	ON/OFF	Active Mop Setpt	
	PLM.B	ON/OFF	Cir B EXV Position Limit	
	SPR.2	ON/OFF	Spare 2 Temperature	
	OUTPUTS CIRCUIT A			
CIR.A	CC.A1	ON/OFF	Compressor A1 Relay	
	DPE.R	ON/OFF	Comp A1 Load Percent	
	CC.A2	ON/OFF	Compressor A2 Relay	
	CC.A3	ON/OFF	Compressor A3 Relay	
	OUTPUTS CIRCUIT B			
CIR.B	CC.B1	ON/OFF	Compressor B1 Relay	See Note
	CC.B2	ON/OFF	Compressor B2 Relay	See Note
	CC.B3	ON/OFF	Compressor B3 Relay	See Note

NOTE: If the unit has a single circuit, the Circuit B items will not appear in the display.

APPENDIX A — DISPLAY TABLES (cont)

Configuration Mode and Sub-Mode Directory

SUB-MODE	ITEM	DISPLAY	ITEM DESCRIPTION	COMMENT
	DISPLAY CONFIGURATION			
DISP	TEST	ON/OFF	Test Display LEDs	
	METR	ON/OFF	Metric Display	Off = English On = Metric
	LANG	X	Language Selection	Default: 0 0 = English 1 = Espanol 2 = Francais 3 = Portuguese
	PAS.E	ENBL/DSBL	Password Enable	Default: Enable
	PASS	XXXX	Service Password	Default: 1111
	UNIT CONFIGURATION			
UNIT	SIZE		Unit Size	
	SZA.1	XX	Compressor A1 Size	Automatically configured dependant on unit size.
	SZA.2	XX	Compressor A2 Size	
	SZA.3	XX	Compressor A3 Size	
	SZB.1	XX	Compressor B1 Size	
	SZB.2	XX	Compressor B2 Size	
	SZB.3	XX	Compressor B3 Size	
	SH.SP	XX	Suction Superheat Setpt	Dependent on Unit Size
	FAN.S	X	Number of Fans	Default: 9 F
	EXV	YES/NO	EXV Module Installed	Default: Yes
	A1.TY	YES/NO	Compressor A1 Digital	Default: No
	MAX.T	XX	Maximum A1 Unload Time	Default: 7 Max = 12 (010,015) Max = 10 (018-090)
	UNIT OPTIONS 1 HARDWARE			
OPT1	FLUD	X	Cooler Fluid	Default: Water 1 = Water 2 = Medium Temperature Brine
	MLV.S	YES/NO	Minimum Load Valve Select	Default: No
	CSB.E	ENBL/DSBL	Csb Boards Enable	Default: Enable
	CPC	ON/OFF	Cooler Pump Control	Default: Off
	PM1E	YES/NO	Cooler Pump 1 Enable	
	PM2E	YES/NO	Cooler Pump 2 Enable	
	PM.P.S	YES/NO	Cooler Pmp Periodic Strt	Default: No
	PM.SL	X	Cooler Pump Select	Default: Automatic 0 = Automatic 1 = Pump 1 Starts first 2 = Pump 2 Starts first
	PM.DY	XX MIN	Cooler Pump Shutdown Dly	0 to 10 minutes, Default: 1 min.
	PM.DT	XXXX HRS	Pump Changeover Hours	Default: 500 hours
	ROT.P	YES/NO	Rotate Cooler Pumps Now	User Entry
	PMP.O	X	Cooler Pump Operation	Default: 0 0 = Auto 1 = Continuous
	PM.HT	XX.X F	Pump High Temp Cut Off	Default: 95 F Range: 95 - 125 F
	EMM	YES/NO	EMM Module Installed	
	CND.T	X	Cnd HX Typ:0=RTPF 1=MCHX	
	MOPS	XX	EXV MOP Set Point	Default: 50 F Range: 40 - 80 F
	APPR	XX	Config Approach Set Point	Default: 9.0 F Range: 5 - 40 F

APPENDIX A — DISPLAY TABLES (cont)

Configuration Mode and Sub-Mode Directory (cont)

SUB-MODE	ITEM	DISPLAY	ITEM DESCRIPTION	COMMENT
OPT2	UNIT OPTIONS 2 CONTROLS			
	CTRL	X	Control Method	Default: 0 0 = Enable/Off/Remote Switch 2 = Occupancy 3 = CCN Control
	LOAD	X	Loading Sequence Select	Default: 1 1 = Equal 2 = Staged
	LLCS	X	Lead/Lag Circuit Select	Default: 1 1 = Automatic 2 = Circuit A Leads 3 = Circuit B Leads
	LCWT	XX	High LCW Alert Limit	Default: 60 F Range: 2 to 60 F
	DELY	XX	Minutes Off Time	Default: 0 Minutes Range: 0 to 15 Minutes
	ICE.M	ENBL/DSBL	Ice Mode Enable	Default: Disable
	LS.MD	X	Low Sound Mode Select	Default: 0 0 = Mode Disable 1 = Fan Noise Only 2 = Fan/Compressor Noise
	LS.ST	00:00	Low Sound Start Time	Default: 00:00
	LS.ND	00:00	Low Sound End Time	Default: 00:00
	LS.LT	XXX%	Low Sound Capacity Limit	Default: 100% Range: 0 to 100%
CCN	CCN NETWORK CONFIGS			
	CCNA	XXX	CCN Address	Default: 1 Range: 0 to 239
	CCNB	XXX	CCN Bus Number	Default: 1 Range: 0 to 239
	BAUD	X	CCN Baud Rate	Default: 3 1 = 2400 2 = 4800 3 = 9600 4 =19,200 5 =38,400

APPENDIX A — DISPLAY TABLES (cont)
Configuration Mode and Sub-Mode Directory (cont)

SUB-MODE	ITEM	DISPLAY	ITEM DESCRIPTION	COMMENT
EXV.A	CIR A EXV CONFIGURATION			
	EXV.L	XX%	EXV Opening at Low LWT	Default:25% Range:0 to 50%
	LWT.L	XX° F	LWT for EXV Min Opening	Default:10 F Range:-20 to 40 F
	EXV.H	XX%	EXV Opening at High LWT	Default:50% Range:0 to 70%
	LWT.H	XX° F	LWT for EXV Max Opening	Default:35 F Range:20 to 70 F
	MIN.A	XXX	EXV CIRC.A Min Position	Default: 2 Range: 0 - 100
	RNG.A	XXXXX	EXVA Steps in Range	Default: * Range: 0 - 65535
	SPD.A	XXXXX	EXVA Steps Per Second	Default: 150 Range: 0 - 65535
	POF.A	XXX	EXVA Fail Position In%	Default: 0 Range: 0 - 100
	MIN.A	XXXXX	EXVA Minimum Steps	Default: 0 Range: 0 - 65535
	MAX.A	XXXXX	EXVA Maximum Steps	Default: * Range: 0 - 65535
	OVR.A	XXX	EXVA Overrun Steps	Default: 167 Range: 0 - 65535
	TYP.A	0,1	EXVA Stepper Type	Default: 1 0 = UNIPOLAR 1 = BIPOLAR
	H.SCT	XXX	High SCT Threshold	Default: 115 Range: 50 - 140
	X.PCT	XX	Open EXV X% on 2nd COMP	Default: 10 Range: 0 - 30
	X.PER	XX	Move EXV X% on DISCRSOL	Default: 5 Range: 0 - 30
	A.PCT	XXX	Pre-Open EXV - Fan Adding	Default: 10 Range: 0 - 100
	M.PCT	XXX	Pre-Close EXV - Fan Sub	Default: 10 Range: 0 - 100
	S.PCT	XXX	Pre-Close EXV - Lag Shut	Default: 10 Range: 0 - 100
	DELY	XXX	Lag Start Delay	Default: 10 Range: 0 - 100
	L.DL.T	XXX	Low SH Delta T - EXV Move	Default: 6 Range: 0 - 240
	SHR.T	XX.X ΔF	EXV Rate Threshold	Default: 0.2ΔF Range: –1.0 to 1.0 ΔF
	L.EX.M	X.X%	Low SH Override EXV Move	Default: 1.0% Range: 0.4 to 3.0%
EXV.B	CIR B EXV CONFIGURATION			
	MIN.B	XXX	EXV Circ.B Min Position	Default: 2% Range:0 to 100
	RNG.B	XXXXX	EXVB Steps in Range	Default: * Range: 0 to 65535
	SPD.B	XXXXX	EXVB Steps Per Second	Default: 150 Range: 0 to 65535
	POF.B	XXX	EXVB Fail Position in %	Default: 0 Range: 0 to 100
	MIN.B	XXXXX	EXVB Minimum Steps	Default: 0 Range: 0 to 65535
	MAX.B	XXXXX	EXVB Maximum Steps	Default: * Range: 0 to 65535
	OVR.B	XXX	EXVB Overrun Steps	Default: 167 Range: 0 to 65535
	TYP.B	0,1	EXVB Stepper Type	Default: 1 0 = UNIPOLAR 1 = BIPOLAR

* Sizes 010-020 and 035-045, default is 1596. Sizes 025,030, 050-060, default is 2500, and 070-100 A circuit, default is 2785. 100 B circuit - 150, default is 3690.

APPENDIX A — DISPLAY TABLES (cont)

Configuration Mode and Sub-Mode Directory (cont)

SUB-MODE	ITEM	DISPLAY	ITEM DESCRIPTION	COMMENT
MM	MOTORMASTER			
	MMR.S	YES/NO	Motormaster Select	Default: No
	P.GAN	XX	Head Pressure P Gain	Default: 1 Range: 1 to 4
	I.GAN	XX.X	Head Pressure I Gain	Default: 0.1 Range: -20 to 20
	D.GAN	XX.X	Head Pressure D Gain	Default: 0.0 Range: -20 to 20
	MIN.S	XX	Minimum Fan Speed	Default: 5.0 Range: 0 to 100
RSET	RESET COOL TEMP			
	CRST	X	Cooling Reset Type	Default: 0 0 = No Reset 1 = 4 to 20 mA Input 2 = Outdoor Air Temperature 3 = Return Fluid 4 = Space Temperature
	MA.DG	XX.XΔF	4-20 - Degrees Reset	Default: 0.0 ΔF Range: -30 to 30 ΔF
	RM.NO	XXX.X °F	Remote - No Reset Temp	Default: 125 F Range: 0° to125 F
	RM.F	XXX.X °F	Remote - Full Reset Temp	Default: 0 F Range: 0° to125 F
	RM.DG	XX.X ΔF	Remote - Degrees Reset	Default: 0.0 ΔF Range: -30 to 30 ΔF
	RT.NO	XXX.XΔF	Return - No Reset Temp	Default: 10.0 ΔF Range: 0° to125 F
	RT.F	XXX.XΔF	Return - Full Reset Temp	Default: 10.0 ΔF Range: 0° to125 F
	RT.DG	XX.X ΔF	Return - Degrees Reset	Default: 0.0 ΔF Range: -30 to 30 ΔF
	DMDC	X	Demand Limit Select	Default: 0 0 = None 1 = Switch 2 - 4 to 20 mA Input 3 = CCN Loadshed
	DM20	XXX%	Demand Limit at 20 mA	Default: 100% Range: 0 to 100%
	SHNM	XXX	Loadshed Group Number	Default: 0 Range: 0 to 99
	SHDL	XXX%	Loadshed Demand Delta	Default: 0% Range: 0 to 60%
	SHTM	XXX	Maximum Loadshed Time	Default: 60 minutes Range: 0 to 120 minutes
	DLS1	XXX%	Demand Limit Switch 1	Default: 80% Range: 0 to 100%
	DLS2	XXX%	Demand Limit Switch 2	Default: 50% Range: 0 to 100%
	LLEN	ENBL/DSBL	Lead/Lag Chiller Enable	Default: Disable
	MSSL	SLVE/MAST	Master/Slave Select	Default: Master
	SLVA	XXX	Slave Address	Default: 0 Range: 0 to 239
	LLBL	X	Lead/Lag Balance Select	Default: Master Leads 0 = Master Leads 1 = Slave Leads 2 = Automatic
	LLBD	XXX	Lead/Lag Balance Delta	Default: 168 hours Range: 40 to 400 hours
	LLDY	XXX	Lag Start Delay	Default: 5 minutes Range: 0 to 30 minutes
	PARA	YES	Parallel Configuration	Default: Yes (cannot be changed)

APPENDIX A — DISPLAY TABLES (cont)

Configuration Mode and Sub-Mode Directory (cont)

SUB-MODE	ITEM	DISPLAY	ITEM DESCRIPTION	COMMENT
SLCT	SETPOINT AND RAMP LOAD			
	CLSP	X	Cooling Set Point Select	Default: 0 0 = Single 1 = Dual Switch 2 = Dual CCN Occupied 3 = 4 to 20 mA Input (requires EMM)
	RL.S	ENBL/DSBL	Ramp Load Select	Default: Enable
	CRMP	ENBL/DSBL	Cooling Ramp Loading	Default: 1.0 Range: 0.2 to 2
	SCHD	XX	Schedule Number	Default: 1 Range: 1 to 99
	Z.GN	X.X	Deadband Multiplier	Default: 1 Range: 1 to 4
SERV	SERVICE CONFIGURATION			
	EN.A1	ENBL/DSBL	Enable Compressor A1	
	EN.A2	ENBL/DSBL	Enable Compressor A2	
	EN.A3	ENBL/DSBL	Enable Compressor A3	
	EN.B1	ENBL/DSBL	Enable Compressor B1	
	EN.B2	ENBL/DSBL	Enable Compressor B2	
	EN.B3	ENBL/DSBL	Enable Compressor B3	
	REV.R	ENBL/DSBL	Reverse Rotation Enable	Default: Enabled
BCST	BROADCAST CONFIGURATION			
	T.D.BC	ON/OFF	CCN Time/Date Broadcast	Default: Off
	OAT.B	ON/OFF	CCN OAT Broadcast	Default: Off
	G.S.BC	ON/OFF	Global Schedule Broadcst	Default: Off
	BC.AK	ON/OFF	CCN Broadcast Ack'er	Default: Off

APPENDIX A — DISPLAY TABLES (cont)

Time Clock Mode and Sub-Mode Directory

SUB-MODE	ITEM	DISPLAY	ITEM DESCRIPTION	COMMENT
TIME	TIME OF DAY			
	HH.MM	XX.XX	Hour and Minute	Military (00:00 - 23:59)
DATE	MONTH, DATE, DAY, AND YEAR			
	MNTH	XX	Month of Year	1 - 12 (1 = January, 2 = February, etc.)
	DOM	XX	Day of Month	Range: 01 -31
	DAY	X	Day of Week	1 - 7 (1 = Monday, 2 = Tuesday, etc.)
	YEAR	XXXX	Year of Century	
DST	DAYLIGHT SAVINGS TIME			
	STR.M	XX	Month	Default: 4 Range 1- 12
	STR.W	X	Week	Default: 1 Range 1- 5
	STR.D	X	Day	Default: 7 Range 1- 7
	MIN.A	XX	Minutes to Add	Default: 60 Range 0 - 99
	STP.M	XX	Month	Default: 10 Range 1- 12
	STP.W	XX	Week	Default: 5 Range 1- 5
	STP.D	XX	Day	Default: 7 Range 1- 7
	MIN.S	XX	Minutes to Subtract	Default: 60 Range 0 - 99
HOL.L	LOCAL HOLIDAY SCHEDULES			
HD.01	HOLIDAY SCHEDULE 01			
	MON	XX	Holiday Start Month	
	DAY	XX	Start Day	
	LEN	XX	Duration (days)	
HD.02	HOLIDAY SCHEDULE 02			
	MON	XX	Holiday Start Month	1 - 12 (1 = January, 2 = February, etc.)
	DAY	XX	Start Day	01-31
	LEN	XX	Duration (days)	
HD.03	HOLIDAY SCHEDULE 03			
	MON	XX	Holiday Start Month	1 - 12 (1 = January, 2 = February, etc.)
	DAY	XX	Start Day	01-31
	LEN	XX	Duration (days)	
HD.04	HOLIDAY SCHEDULE 04			
	MON	XX	Holiday Start Month	1 - 12 (1 = January, 2 = February, etc.)
	DAY	XX	Start Day	01-31
	LEN	XX	Duration (days)	
HD.05	HOLIDAY SCHEDULE 05			
	MON	XX	Holiday Start Month	1 - 12 (1 = January, 2 = February, etc.)
	DAY	XX	Start Day	01-31
	LEN	XX	Duration (days)	
HD.06	HOLIDAY SCHEDULE 06			
	MON	XX	Holiday Start Month	1 - 12 (1 = January, 2 = February, etc.)
	DAY	XX	Start Day	01-31
	LEN	XX	Duration (days)	
HD.07	HOLIDAY SCHEDULE 07			
	MON	XX	Holiday Start Month	1 - 12 (1 = January, 2 = February, etc.)
	DAY	XX	Start Day	01-31
	LEN	XX	Duration (days)	
HD.08	HOLIDAY SCHEDULE 08			
	MON	XX	Holiday Start Month	1 - 12 (1 = January, 2 = February, etc.)
	DAY	XX	Start Day	01-31
	LEN	XX	Duration (days)	

APPENDIX A — DISPLAY TABLES (cont)

Time Clock Mode and Sub-Mode Directory (cont)

SUB-MODE	ITEM	DISPLAY	ITEM DESCRIPTION	COMMENT
HD.09	HOLIDAY SCHEDULE 09			
	MON	XX	Holiday Start Month	1 - 12 (1 = January, 2 = February, etc.)
	DAY	XX	Start Day	01-31
	LEN	XX	Duration (days)	
HD.10	HOLIDAY SCHEDULE 10			
	MON	XX	Holiday Start Month	1 - 12 (1 = January, 2 = February, etc.)
	DAY	XX	Start Day	01-31
	LEN	XX	Duration (days)	
HD.11	HOLIDAY SCHEDULE 11			
	MON	XX	Holiday Start Month	1 - 12 (1 = January, 2 = February, etc.)
	DAY	XX	Start Day	01-31
	LEN	XX	Duration (days)	
HD.12	HOLIDAY SCHEDULE 12			
	MON	XX	Holiday Start Month	1 - 12 (1 = January, 2 = February, etc.)
	DAY	XX	Start Day	01-31
	LEN	XX	Duration (days)	
HD.13	HOLIDAY SCHEDULE 13			
	MON	XX	Holiday Start Month	1 - 12 (1 = January, 2 = February, etc.)
	DAY	XX	Start Day	01-31
	LEN	XX	Duration (days)	
HD.14	HOLIDAY SCHEDULE 14			
	MON	XX	Holiday Start Month	1 - 12 (1 = January, 2 = February, etc.)
	DAY	XX	Start Day	01-31
	LEN	XX	Duration (days)	
HD.15	HOLIDAY SCHEDULE 15			
	MON	XX	Holiday Start Month	1 - 12 (1 = January, 2 = February, etc.)
	DAY	XX	Start Day	01-31
	LEN	XX	Duration (days)	
HD.16	HOLIDAY SCHEDULE 16			
	MON	XX	Holiday Start Month	1 - 12 (1 = January, 2 = February, etc.)
	DAY	XX	Start Day	01-31
	LEN	XX	Duration (days)	
HD.17	HOLIDAY SCHEDULE 17			
	MON	XX	Holiday Start Month	1 - 12 (1 = January, 2 = February, etc.)
	DAY	XX	Start Day	01-31
	LEN	XX	Duration (days)	
HD.18	HOLIDAY SCHEDULE 18			
	MON	XX	Holiday Start Month	1 - 12 (1 = January, 2 = February, etc.)
	DAY	XX	Start Day	01-31
	LEN	XX	Duration (days)	
HD.19	HOLIDAY SCHEDULE 19			
	MON	XX	Holiday Start Month	1 - 12 (1 = January, 2 = February, etc.)
	DAY	XX	Start Day	01-31
	LEN	XX	Duration (days)	

APPENDIX A — DISPLAY TABLES (cont)

Time Clock Mode and Sub-Mode Directory (cont)

SUB-MODE	ITEM	DISPLAY	ITEM DESCRIPTION	COMMENT
HD.20	HOLIDAY SCHEDULE 20			
	MON	XX	Holiday Start Month	1 - 12 (1 = January, 2 = February, etc.)
	DAY	XX	Start Day	01-31
	LEN	XX	Duration (days)	
HD.21	HOLIDAY SCHEDULE 21			
	MON	XX	Holiday Start Month	1 - 12 (1 = January, 2 = February, etc.)
	DAY	XX	Start Day	01-31
	LEN	XX	Duration (days)	
HD.22	HOLIDAY SCHEDULE 22			
	MON	XX	Holiday Start Month	1 - 12 (1 = January, 2 = February, etc.)
	DAY	XX	Start Day	01-31
	LEN	XX	Duration (days)	
HD.23	HOLIDAY SCHEDULE 23			
	MON	XX	Holiday Start Month	1 - 12 (1 = January, 2 = February, etc.)
	DAY	XX	Start Day	01-31
	LEN	XX	Duration (days)	
HD.24	HOLIDAY SCHEDULE 24			
	MON	XX	Holiday Start Month	1 - 12 (1 = January, 2 = February, etc.)
	DAY	XX	Start Day	01-31
	LEN	XX	Duration (days)	
HD.25	HOLIDAY SCHEDULE 25			
	MON	XX	Holiday Start Month	1 - 12 (1 = January, 2 = February, etc.)
	DAY	XX	Start Day	01-31
	LEN	XX	Duration (days)	
HD.26	HOLIDAY SCHEDULE 26			
	MON	XX	Holiday Start Month	1 - 12 (1 = January, 2 = February, etc.)
	DAY	XX	Start Day	01-31
	LEN	XX	Duration (days)	
HD.27	HOLIDAY SCHEDULE 27			
	MON	XX	Holiday Start Month	1 - 12 (1 = January, 2 = February, etc.)
	DAY	XX	Start Day	01-31
	LEN	XX	Duration (days)	
HD.28	HOLIDAY SCHEDULE 28			
	MON	XX	Holiday Start Month	1 - 12 (1 = January, 2 = February, etc.)
	DAY	XX	Start Day	01-31
	LEN	XX	Duration (days)	
HD.29	HOLIDAY SCHEDULE 29			
	MON	XX	Holiday Start Month	1 - 12 (1 = January, 2 = February, etc.)
	DAY	XX	Start Day	01-31
	LEN	XX	Duration (days)	
HD.30	HOLIDAY SCHEDULE 30			
	MON	XX	Holiday Start Month	1 - 12 (1 = January, 2 = February, etc.)
	DAY	XX	Start Day	01-31
	LEN	XX	Duration (days)	

APPENDIX A — DISPLAY TABLES (cont)

Time Clock Mode and Sub-Mode Directory (cont)

SUB-MODE	ITEM	DISPLAY	ITEM DESCRIPTION	COMMENT
SCH.N			Schedule Number 0	
SCH.L	LOCAL OCCUPANCY SCHEDULE			
PER.1	OCCUPANCY PERIOD 1			
	OCC.1	XX:XX	Period Occupied Time	Military (00:00 - 23:59)
	UNC.1	XX:XX	Period Unoccupied Time	Military (00:00 - 23:59)
	MON.1	YES/NO	Monday In Period	
	TUE.1	YES/NO	Tuesday In Period	
	WED.1	YES/NO	Wednesday In Period	
	THU.1	YES/NO	Thursday In Period	
	FRI.1	YES/NO	Friday In Period	
	SAT.1	YES/NO	Saturday In Period	
	SUN.1	YES/NO	Sunday In Period	
	HOL.1	YES/NO	Holiday In Period	
PER.2	OCCUPANCY PERIOD 2			
	OCC.2	XX:XX	Period Occupied Time	Military (00:00 - 23:59)
	UNC.2	XX:XX	Period Unoccupied Time	Military (00:00 - 23:59)
	MON.2	YES/NO	Monday In Period	
	TUE.2	YES/NO	Tuesday In Period	
	WED.2	YES/NO	Wednesday In Period	
	THU.2	YES/NO	Thursday In Period	
	FRI.2	YES/NO	Friday In Period	
	SAT.2	YES/NO	Saturday In Period	
	SUN.2	YES/NO	Sunday In Period	
	HOL.2	YES/NO	Holiday In Period	
PER.3	OCCUPANCY PERIOD 3			
	OCC.3	XX:XX	Period Occupied Time	Military (00:00 - 23:59)
	UNC.3	XX:XX	Period Unoccupied Time	Military (00:00 - 23:59)
	MON.3	YES/NO	Monday In Period	
	TUE.3	YES/NO	Tuesday In Period	
	WED.3	YES/NO	Wednesday In Period	
	THU.3	YES/NO	Thursday In Period	
	FRI.3	YES/NO	Friday In Period	
	SAT.3	YES/NO	Saturday In Period	
	SUN.3	YES/NO	Sunday In Period	
	HOL.3	YES/NO	Holiday In Period	
PER.4	OCCUPANCY PERIOD 4			
	OCC.4	XX:XX	Period Occupied Time	Military (00:00 - 23:59)
	UNC.4	XX:XX	Period Unoccupied Time	Military (00:00 - 23:59)
	MON.4	YES/NO	Monday In Period	
	TUE.4	YES/NO	Tuesday In Period	
	WED.4	YES/NO	Wednesday In Period	
	THU.4	YES/NO	Thursday In Period	
	FRI.4	YES/NO	Friday In Period	
	SAT.4	YES/NO	Saturday In Period	
	SUN.4	YES/NO	Sunday In Period	
	HOL.4	YES/NO	Holiday In Period	
PER.5	OCCUPANCY PERIOD 5			
	OCC.5	XX:XX	Period Occupied Time	Military (00:00 - 23:59)
	UNC.5	XX:XX	Period Unoccupied Time	Military (00:00 - 23:59)
	MON.5	YES/NO	Monday In Period	
	TUE.5	YES/NO	Tuesday In Period	
	WED.5	YES/NO	Wednesday In Period	
	THU.5	YES/NO	Thursday In Period	
	FRI.5	YES/NO	Friday In Period	
	SAT.5	YES/NO	Saturday In Period	
	SUN.5	YES/NO	Sunday In Period	
	HOL.5	YES/NO	Holiday In Period	

APPENDIX A — DISPLAY TABLES (cont)

Time Clock Mode and Sub-Mode Directory (cont)

SUB-MODE	ITEM	DISPLAY	ITEM DESCRIPTION	COMMENT
PER.6	OCCUPANCY PERIOD 6			
	OCC.6	XX:XX	Period Occupied Time	Military (00:00 - 23:59)
	UNC.6	XX:XX	Period Unoccupied Time	Military (00:00 - 23:59)
	MON.6	YES/NO	Monday In Period	
	TUE.6	YES/NO	Tuesday In Period	
	WED.6	YES/NO	Wednesday In Period	
	THU.6	YES/NO	Thursday In Period	
	FRI.6	YES/NO	Friday In Period	
	SAT.6	YES/NO	Saturday In Period	
	SUN.6	YES/NO	Sunday In Period	
	HOL.6	YES/NO	Holiday In Period	
PER.7	OCCUPANCY PERIOD 7			
	OCC.7	XX:XX	Period Occupied Time	Military (00:00 - 23:59)
	UNC.7	XX:XX	Period Unoccupied Time	Military (00:00 - 23:59)
	MON.7	YES/NO	Monday In Period	
	TUE.7	YES/NO	Tuesday In Period	
	WED.7	YES/NO	Wednesday In Period	
	THU.7	YES/NO	Thursday In Period	
	FRI.7	YES/NO	Friday In Period	
	SAT.7	YES/NO	Saturday In Period	
	SUN.7	YES/NO	Sunday In Period	
	HOL.7	YES/NO	Holiday In Period	
PER.8	OCCUPANCY PERIOD 8			
	OCC.8	XX:XX	Period Occupied Time	Military (00:00 - 23:59)
	UNC.8	XX:XX	Period Unoccupied Time	Military (00:00 - 23:59)
	MON.8	YES/NO	Monday In Period	
	TUE.8	YES/NO	Tuesday In Period	
	WED.8	YES/NO	Wednesday In Period	
	THU.8	YES/NO	Thursday In Period	
	FRI.8	YES/NO	Friday In Period	
	SAT.8	YES/NO	Saturday In Period	
	SUN.8	YES/NO	Sunday In Period	
	HOL.8	YES/NO	Holiday In Period	
OVR	SCHEDULE OVERRIDE			
	OVR.T	X	Timed Override Hours	Default: 0 Range 0-4 hours
	OVR.L	X	Override Time Limit	Default: 0 Range 0-4 hours
	T.OVR	YES/NO	Timed Override	User Entry

APPENDIX A — DISPLAY TABLES (cont)

Operating Mode and Sub-Mode Directory

SUB-MODE	ITEM	DISPLAY	ITEM DESCRIPTION	COMMENT
MODE	MODES CONTROLLING UNIT			
	MD01	ON/OFF	CSM Controlling Chiller	
	MD02	ON/OFF	WSM Controlling Chiller	
	MD03	ON/OFF	Master/Slave Control	
	MD05	ON/OFF	Ramp Load Limited	
	MD06	ON/OFF	Timed Override in effect	
	MD07	ON/OFF	Low Cooler Suction TempA	
	MD08	ON/OFF	Low Cooler Suction TempB	
	MD09	ON/OFF	Slow Change Override	
	MD10	ON/OFF	Minimum OFF time active	
	MD13	ON/OFF	Dual Set Point	
	MD14	ON/OFF	Temperature Reset	
	MD15	ON/OFF	Demand Limited	
	MD16	ON/OFF	Cooler Freeze Protection	
	MD17	ON/OFF	Low Temperature Cooling	
	MD18	ON/OFF	High Temperature Cooling	
	MD19	ON/OFF	Making Ice	
	MD20	ON/OFF	Storing Ice	
	MD21	ON/OFF	High SCT Circuit A	
	MD22	ON/OFF	High SCT Circuit B	
	MD23	ON/OFF	Minimum Comp. On Time	
	MD24	ON/OFF	Pump Off Delay Time	
	MD25	ON/OFF	Low Sound Mode	
	MDAO	ON/OFF	Circuit A Trio Oil MGMT	
	MDBO	ON/OFF	Circuit B Trio Oil MGMT	

Alarms Mode and Sub-Mode Directory

SUB-MODE	ITEM	DISPLAY	ITEM DESCRIPTION	COMMENT
CRNT	CURRENTLY ACTIVE ALARMS			
	AXXX TXXX PXXX		Current Alarms 1-25	Alarms are shown as AXXX Alerts are shown as TXXX
RCRN	YES/NO		Reset All Current Alarms	
HIST	ALARM HISTORY			
	AXXX TXXX PXXX		Alarm History 1-20	Alarms are shown as AXXX Alerts are shown as TXXX